SLEIPNER
Ocean born. Tech bred.

Installation manual

Vector fin stabilizer systems
STABILIZER
SPS60E, SPS70E, SPS80E, SPS90E, SPS100E, SPS110E, SPS120E

VECTOR FINS
V3-14, V3-23, V4-12HS, V4-15, V4-19HS, V4-21, V4-26, V4-26HS, V5-31, V5-39

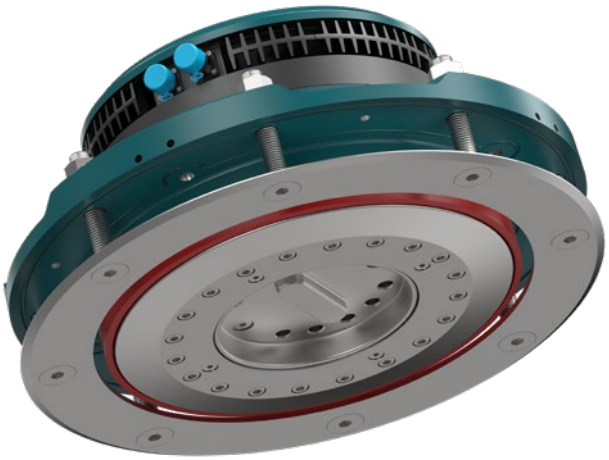

DOCUMENT ID: 7650
REVISION: 27
YEAR: 2026

Contents

Warning and safety **3**

Installation Manual
Responsibility of the Installer 4
For electric eVision stabilizer systems 5
Installation checklist 5
Actuator Dimensions 6
Fin Dimensions 7
eFD Dimensions 8
sFD weight 8
SCU Dimensions 9
Actuator Positioning 10
Fin Positioning 11
Hull Forces 14
Hull Structural forces 15
Actuator Components 17

Actuator installation
Actuator with hull plate Installation (SPS60, 70, 80, 100) 18
Actuator without hull plate installastion (SPS,90,110,120) 26

Electrical Installation 34
eFD Electrical Installation 35
eFD-60-230-1-K 36
eFD-60-230-3-K 36
eFD-80-400-3-K 36
eFD Setup 37
Electrical Installation 38
S-Link System Description 40
Wiring Diagram 2 fin 41
Wiring Reference 42
Wiring diagram 4-fin 43
Wiring reference 4-fin 44
Keel alignment tool setup 45
Keel alignment setup 46
Applying antifouling 47
Fin Components 48
Fin Installation 49
Shaft covers installation 51
Zero inclination setup 52
Dynamic cewnter setting 53
Stabilizer settings 54
Fin Location Label 55
Sleipner Group Waste Disposal and Recycling Guide 56
Service and Support **57**
Product Spare Parts and Additional Resources **57**
Patents **57**
Warranty Statement **58**
Installation checklist **59**

Products covered by this manual:
SPS60E - SPS60E AC Electric Stabilizer Actuator
SPS70E - SPS70E AC Electric Stabilizer Actuator
SPS80E - SPS80E AC Electric Stabilizer Actuator
SPS90E - SPS90E AC Electric Stabilizer Actuator
SPS100E - SPS100E AC Electric Stabilizer Actuator
SPS110E - SPS110E AC Electric Stabilizer Actuator
SPS120E - SPS120E AC Electric Stabilizer Actuator

V3-14 - Vector Fins™ pair - for SPS60E
V4-12HS - Vector Fins™ pair - for SPS60E
V4-15 - Vector Fins™ pair - for SPS60E

V4-19 - Vector Fins™ pair - V4-19 SPS70E
V4-15HS - Vector Fins™ pair for SPS70E
V4-21 - Vector Fins™ pair for SPS70E

V3-23 - Vector Fins™ pair - for SPS80E/90E
V4-21 HS - Vector Fins™ pair - for SPS80E/90E
V4-26 - Vector Fins™ pair - for SPS80E/90E

V4-26HS - Vector Fins™ pair - for SPS100E/110E
V5-31 - Vector Fins™ pair - for SPS100E/110E

V5-39 - Vector Fins™ pair - for SPS120E

EFD-60-230-1-K-25 - SPS Electric Fin Drive - 230V 1Phase 2,5m
EFD-60-230-1-K-45 - SPS Electric Fin Drive - 230V 1Phase 4,5m
EFD-60-400-3-K-45 - SPS Electric Fin Drive - 400V 3Phase 4,5m
EFD-60-230-1-K-70 - SPS Electric Fin Drive - 230V 1Phase 7m
EFD-80-400-3-K-25 - SPS Electric Fin Drive - 400V 3Phase 2,5m
EFD-80-400-3-K-45 - SPS Electric Fin Drive - 400V 3Phase 4,5m
EFD-80-230-3-K-45 - SPS Electric Fin Drive - 230V 3Phase 4,5m

It is essential to read, understand, and follow all instructions, warnings, cautions, and procedures contained within this document. Failure to do so may result in serious injury, death, damage to property or equipment, product malfunction, and may affect warranty coverage.

Warnings and cautions requiring special attention are highlighted. Always read and understand the relevant safety information before using this product or performing any procedure described in this document.

WARNING

Indicates a hazardous situation which, if not avoided, could result in death or serious injury.

CAUTION

Indicates a hazardous situation which, if not avoided, could result in minor or moderate injury or damage to the product.

MC_0800

General:

- The installer must read this document to ensure necessary familiarity with the product before installation.
- Directions outlined in this document cannot be guaranteed to comply with all international and national regulations, including but not limited to health and safety procedures. It is the installers responsibility to adhere to all applicable international and national regulations when installing Sleipner products.
- This document contains general installation guidelines intended to support experienced installers. Contact professional installers familiar with the vessel, Sleipner products and applicable regulations if assistance is required.
- If local regulation requires any electrical work to be performed by a licensed professional, seek a licensed professional.
- When planning the installation of Sleipner products, ensure easy access to the products for future service and inspection requirements.

MC_0038

For stabilizer systems

- Please follow this general guide for steps to prepare and plan your installation process:
- Find the best possible position of the actuators and fins based on the information provided in the sections about:
- Safety and General precautions Measurements.
- Fin positioning, taken other systems into consideration (water trail not affecting propulsion system, exhaust system not interfering with fins etc.).
- Hull forces
- Ensure that it is space to do the reinforcement of the hull if required
- Service access

Plan the installation of the electrical parts including the control panel and wiring runs based on the information in the manual.

Your Sleipner representative will be able to help make an educated decision for what is the best solution for your boat and your preferences. Before starting the installation, the Sleipner representative can ensure that you are not installing parts and products that will not meet your expectations.
Sleipner Motor AS is a manufacturing company of marine equipment and not a Naval Architectural company & therefore take no responsibility regarding the installation of our products onto seagoing vessels.

- This includes any requirement for the vessels:
- Hull reinforcement.
- Change in the vessel's stability.
- Dynamic performance.
- Weight and moment.
- Noise proofing.
- Watertight integrity after installation during normal operations or in the event of a collision.

It is the responsibility of the installer/boat builder to determine hull reinforcement requirements, ensuring that sufficient strengthening measures are in place & the vessel's hull will withstand & maintain watertight integrity in the event of a collision of our product, impacting an object when the vessel is underway.

The stabilizer product includes heavy parts. Ensure suitable lifting and support equipment is available during installation & removal to prevent material damage or personnel injury.

During yacht lifting operations:

- Ensure the stabilizer fins are in the locked/neutral position.
- Lifting personnel are informed that stabilizer fins are installed preventing the danger of snagging the lifting slings & damage to the yacht, its equipment or injury to personnel.

Yacht transportation overland with road vehicles may require the removal of the stabilizer fins. Please contact Sleipner representatives for instruction procedures.

WARNING

Ensure electrical power is switched off before any servicing work is carried out on the stabilizer system.
With power, the Stabilizer systems with ‘at anchor’ function installed & ‘Auto’ selected can suddenly operate & move without warning.

MC_0656

Installation checklist

IMPORTANT:
To ensure and verify a correct installation and setup, and avoiding errors or damange of the system during start up, use the checklist in the topic **“Installation checklist”.**

MC_1055

It covers checkpoints for **Pre-power up, Pre-launch** and **After launch**.

Actuator dimensions

Dimension code	Dimension descriptions	SPS60E		SPS70E		SPS80E		SPS90E		SPS100E		SPS110/120E	
		mm	inch	mm	inch	mm	inch	mm	inch	mm	inch	mm	inch
A	Actuator height outside the hull	16.8	0.7	16.8	0.7	19.6	0.8	13	0.5	23.5	0.9	17	0,7
B	Total actuator height	235.5	9.3	335.5	13.2	352.6	13.9	503.6	19.8	437	17.2	543.4	21.4
C	Actuator height inside the hull	175.3	6.9	255.5	10.1	247.6	9.7	247.6	9.7	287	11.3	287	11.3
D	Hull thickness (sealant included)	60	2.4	80	3.1	105	4.1	256	10.1	150	5.9	256	10.1
ØE	Diameter of the actuator Motor	352	13.9	405	15.9	480	18.9	480	18.9	564	22.2	564	22.2
ØF	Diameter of the actuator through the hull	407.5	16	457.5	18.0	537	21.1	537	21	629	24.8	629	24.8
ØG	Diameter of the actuator base plate	564	22.2	614	24.2	705	27.8	705	28	815	32.1	815	32.1
	Weight (kg/lbs)	118/260		194/428		296/653		407/895		490/1080		574/1262	
	IP rating	IP67											

MC_0711

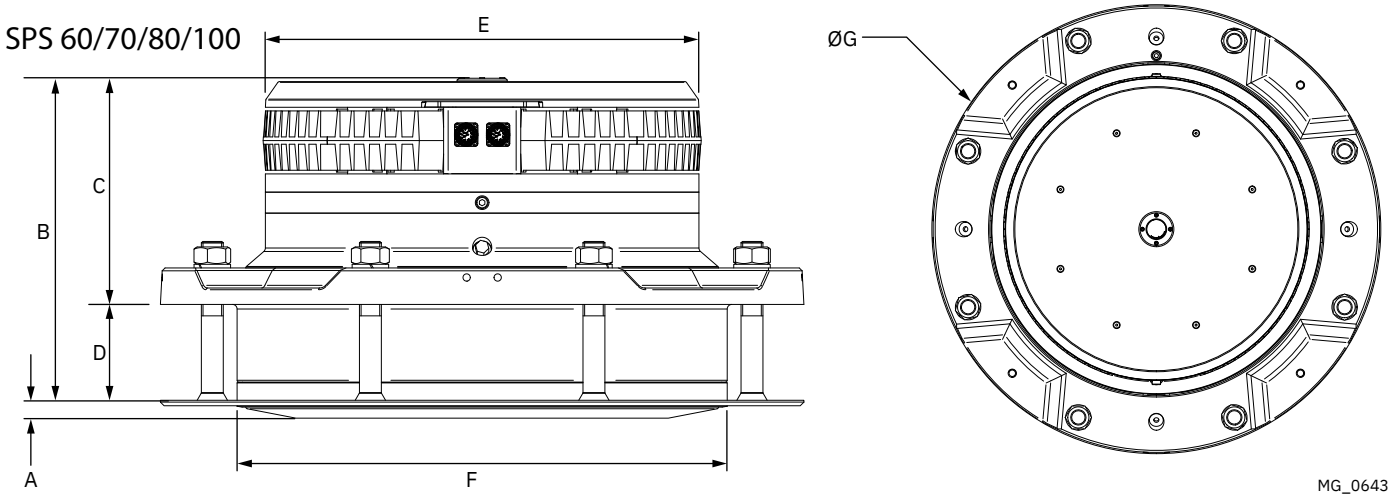

MG_0643

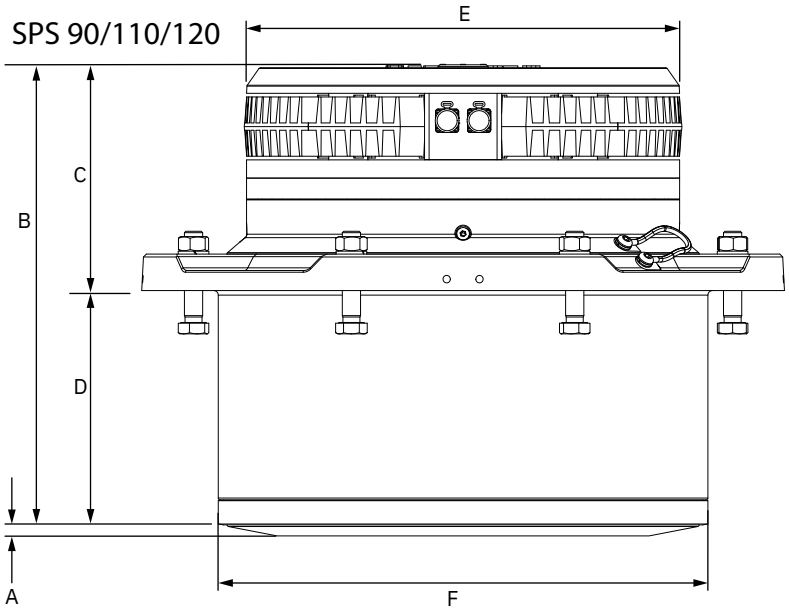

Fin dimensions

Dimension code	Dimension descriptions	SPS60E						SPS70E					
		V3-14 ≤23 knots		V4-12HS ≤40 knots		V4-15 ≤35 knots		V4-19 ≤35 knots		V4-15HS ≤40 knots		V4-21 ≤30knots	
		mm	inch	mm	inch	mm	inch	mm	inch	mm	inch	mm	inch
A	Total fin length	1751	68,9	1574	62,0	1805	71,1	2000	78.7	1805	71,1	2155	84,8
B	Fin length to centre connection	1490	58,7	1330	52,4	1525	60,0	1690	66.5	1525	60,0	1821	71,7
C	Total fin height	843	33,2	764	30,1	876	34,5	970	38.1	876	34,5	1047	41,2
D	Fin width from centre connection	520	20,5	465	18,3	534	21,0	590	23.2	534	21,0	635	25,0
E	Total fin width	613	24,1	558	22,0	627	24,7	700	27.5	627	24,7	760	29,9

Dimension code	Dimension descriptions	SPS80E/90E						SPS100E/110E				SPS120E	
		V3-23 ≤23 knots		V4-21HS ≤40 knots		V4-26 ≤35 knots		V4-26HS ≤35 knots		V5-31 ≤23 knots		V5-39 ≤30 knots	
		mm	inch	mm	inch	mm	inch	mm	inch	mm	inch	mm	inch
A	Total fin length	2256	88,8	2155	84,8	2329	91,7	2329	91,7	2520	99.2	2830	111.4
B	Fin length to centre connection	1920	75,6	1821	71,7	1966	77,4	1966	77,4	2110	83	2375	93.5
C	Total fin height	1086	42,8	1047	41,2	1131	44,5	1131	44,5	1260	49.6	1415	55.7
D	Fin width from centre connection	670	26,4	635	25,0	686	27,0	686	27,0	582	22.9	655	25.8
E	Total fin width	795	31,3	760	29,9	811	31,9	811	31,9	725	28.5	800	31.5

MC_1134

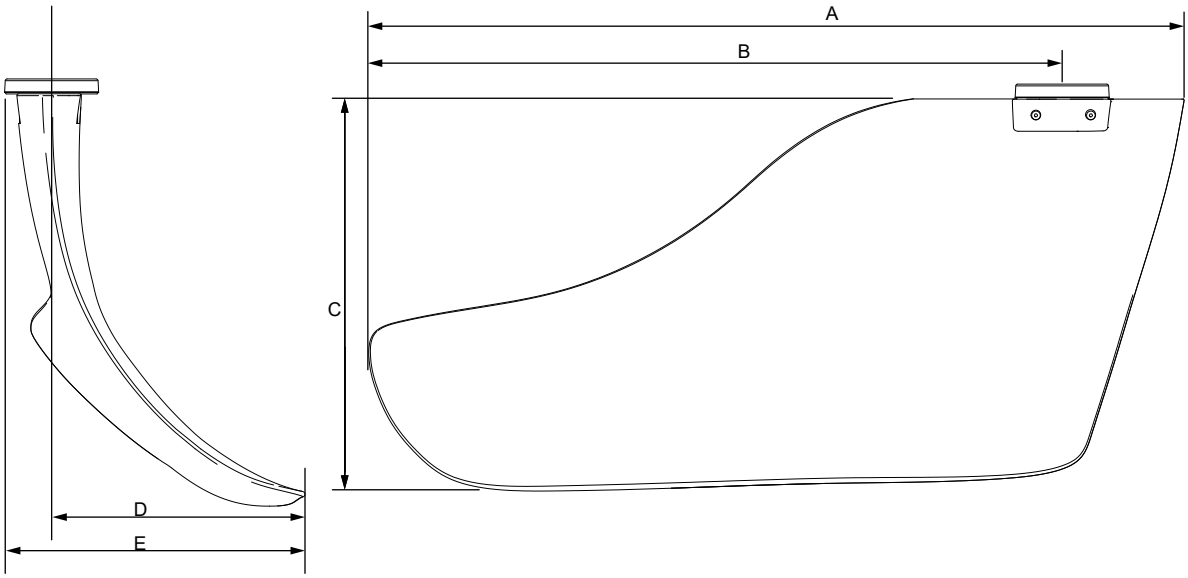

MG_0679

eFD dimensions

Dimension code	Dimension descriptions	eFD	
		mm	inch
H	Height	479	18.85
W	Width	278	10.94
D	Depth	311	12.24
(a)	Mounting hole width	239	9.40
(b)	Mounting hole height	463	18.22
(c)	Mounting hole diameter	6	0.23
	IP rating	IP54	

MC_0661

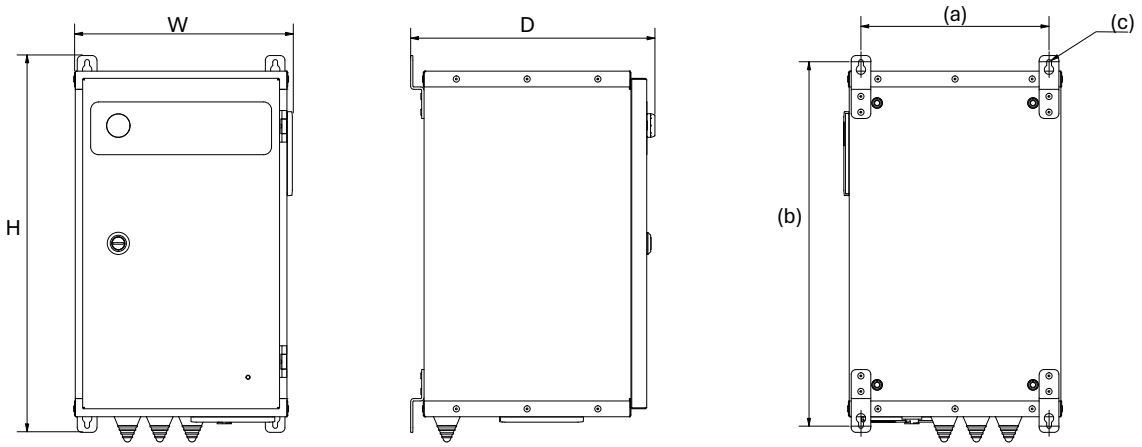

MG_0689

eFD weight

eFD	Description	Weight kg
EFD-60-230-1-K-25	SPS Electric Fin Drive - 230V 1Phase 2,5m	13.5
EFD-60-230-1-K-45	SPS Electric Fin Drive - 230V 1Phase 4,5m	13.6
EFD-60-230-1-K-70	SPS Electric Fin Drive - 230V 1Phase 7m	14.4
EFD-70-400-3-K-70	SPS Electric Fin Drive - 400V 3Phase 7m	19.1
EFD-80-400-3-K-45	SPS Electric Fin Drive - 400V 3Phase 4,5m	18.2
EFD-80-400-3-K-70	SPS Electric Fin Drive - 400V 3Phase 7m	19.1
EFD-100-400-3-K-45	SPS Electric Fin Drive - 400V 3Phase 4,5m	19.9
EFD-100-400-3-K-100	SPS Electric Fin Drive - 400V 3Phase 10m	23.3

Dimension code	Dimension descriptions	SCU-12		SCU-14	
		mm	inch	mm	inch
H	Height	170	7	170	7
W	Width	271	11	289	11.4
D	Depth	60	2.4	96	3.8
(a)	Mounting hole height	153	6	153	6
(b)	Mounting hole width	247	9.7	275	10.8

MC_0662

SCU-12

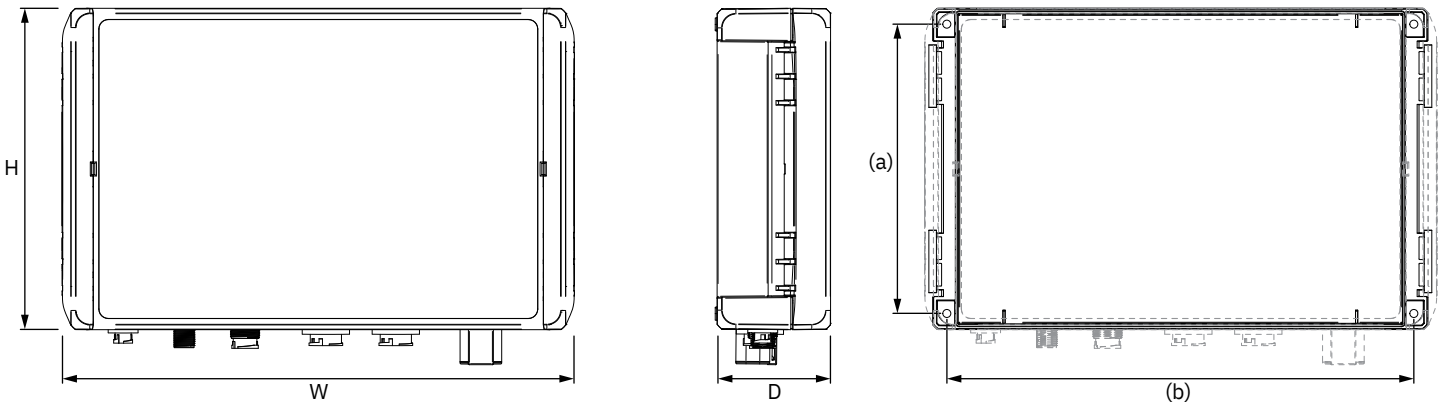

SCU-14

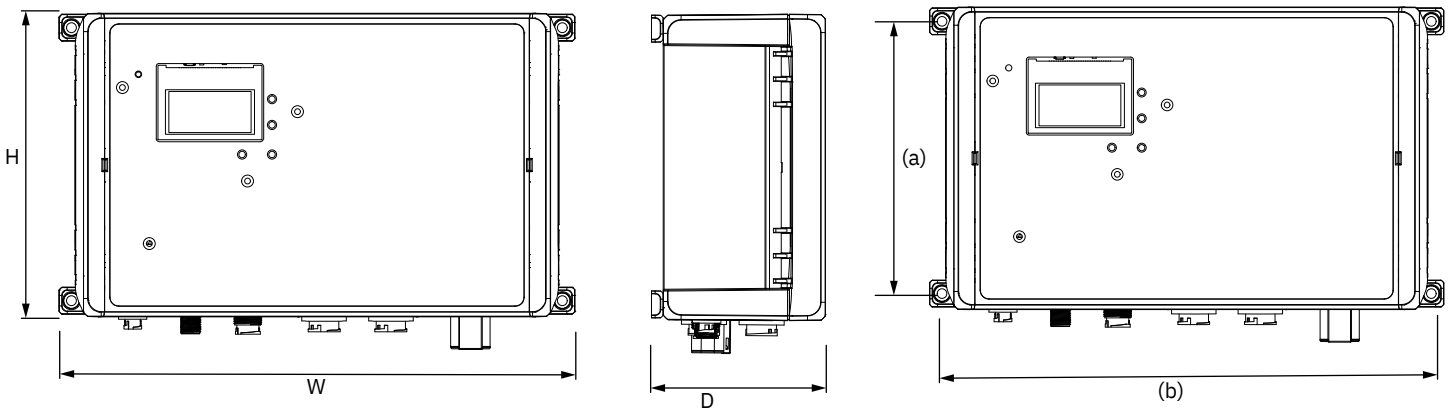

MG_0692

Consider and plan the positioning of the actuator for future service and appropriate area for cooling the electric motor. The ambient temperature is 55°C.
The motor has temperature sensor and system will reduce power to avoid exceeding maximum allowed temperature.

Dimension code	Dimension description	SPS60E		SPS70E		SPS80E		SPS90E		SPS100E		SPS110E		SPS120E	
		mm	inch	mm	inch	mm	inch	mm	inch	mm	inch	mm	inch	mm	inch
(a)	Free space for motor replacement	165	6.5	200	7.9	250	9.9	250	9.9	400	15.7	400	15.7	400	15.7
(b)	Base plate tooling clearance	50	2	50	2	50	2	50	2	100	3.9	100	3.9	100	3.9

MC_0725

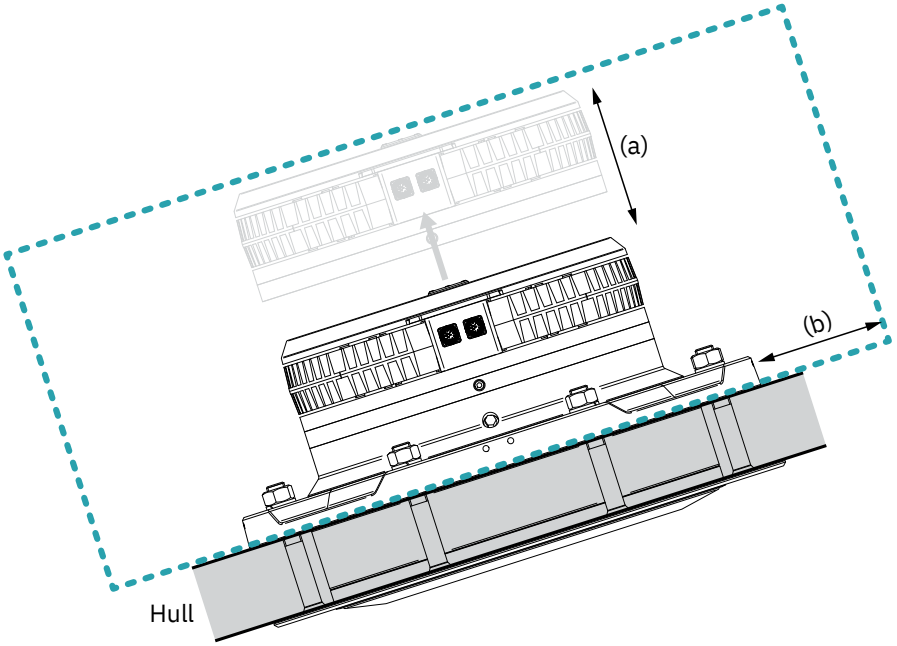

MG_0678

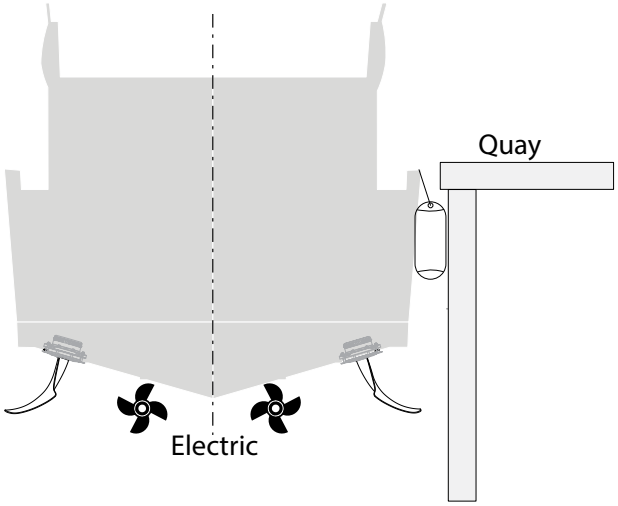

Fins should not extend outside the beam including the fenders, or below the keel/propeller when i neutral position.

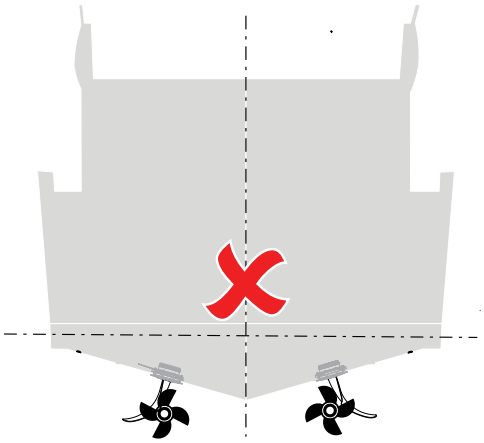

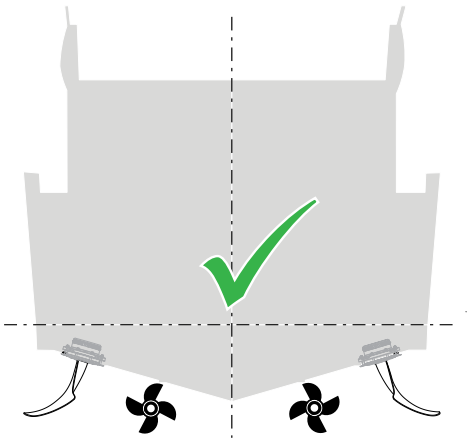

Fins should be placed as far outboard as possible, and NOT in-line with the propellers, to ensure avoiding possible disturbance of the water flow to the props which in the worst case can cause vibrations / cavitation.

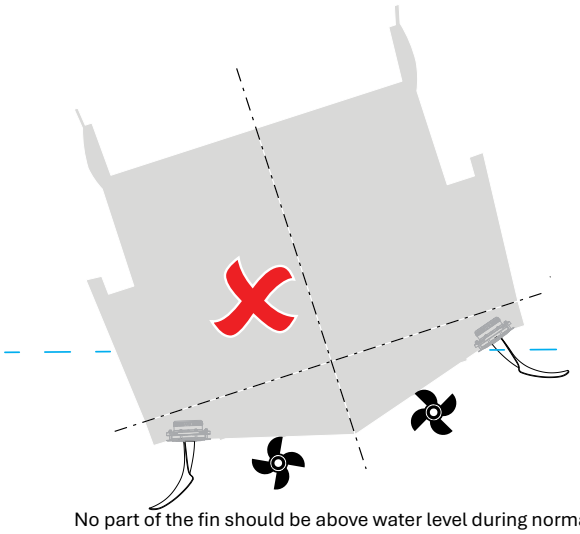

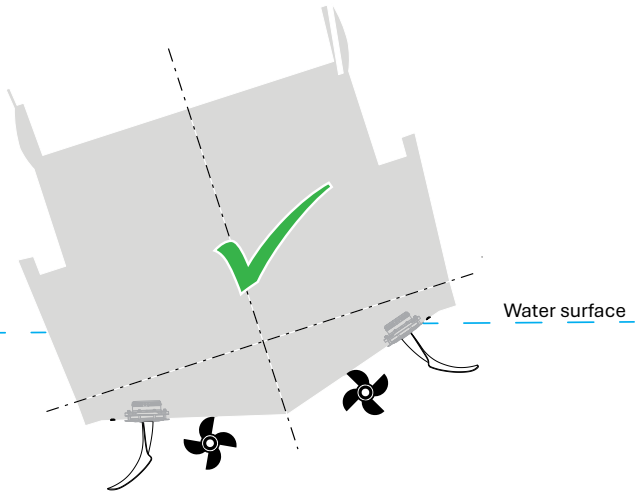

No part of the fin should be above water level during normal roll motion/under normal sea conditions.

MG_0956_1

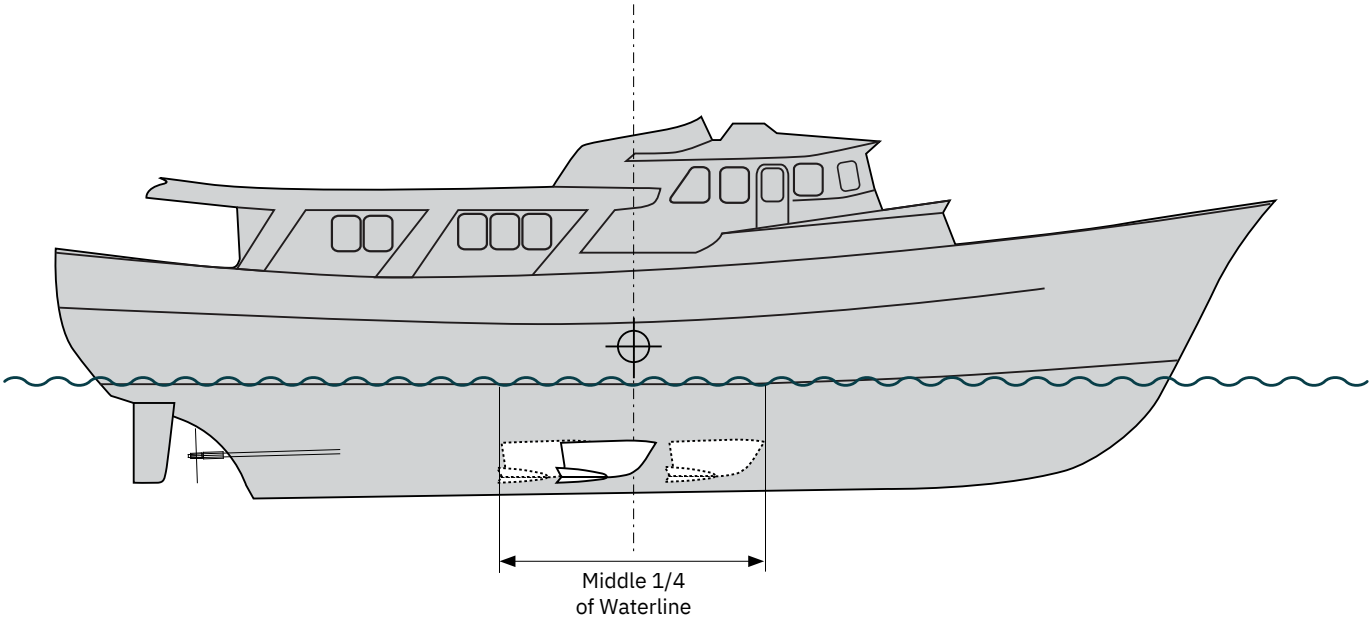

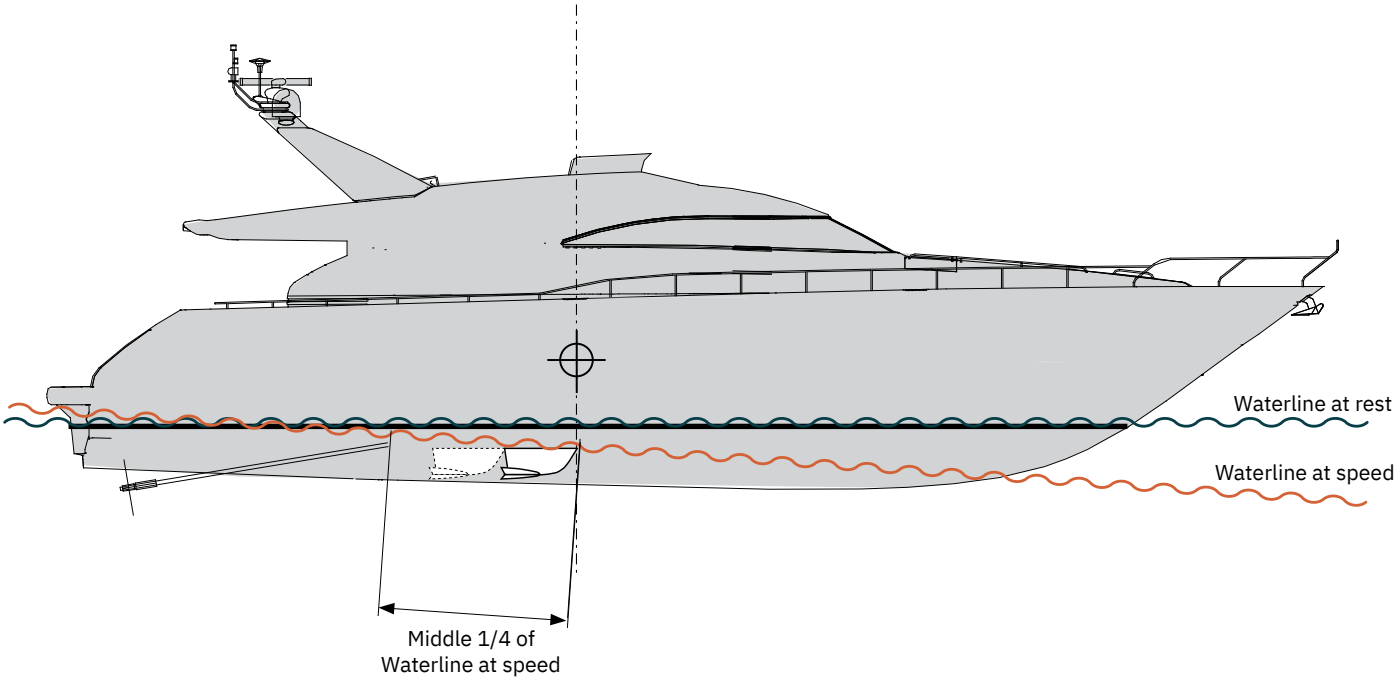

To avoid unwanted influences on the steering characteristics, the fins should be placed close to the vessel longitudinal centre of gravity (LCG)

- If unknown, this is usually a little aft of 50% of the waterline length.

For high speed vessels, the fins should be placed with trailing/leading edge within middle 1/4 of waterline length at speed and not in front of the LCG.

For vessels with top speed under 15 knots, fin may be placed within the middle 1/4 of waterline length.

Note: These are general guidelines and some hull types might allow for an installation position outside of this recommendation.

Transversal fin positioning of Vector Fins™

With Vector finsTM it is a priority to push the fins as far outboard as possible to achieve the most leverage for the fins forces unlike standard fins.

Finding the best position for the fin and actuator positioning often is related to the inside configuration and space that is required for proper installation.

General Rules:
–Push the actuators as far as possible outboard, keeping at least 22 degrees of outboard stroke as a minimum. It is also acceptable installing the fins further inboard If inside configuration/ access to inside parts of actuators is required.
Note: Performance will be reduced slightly due to less leverage arm for the stabilizing force applied by the fins.

MC_0659

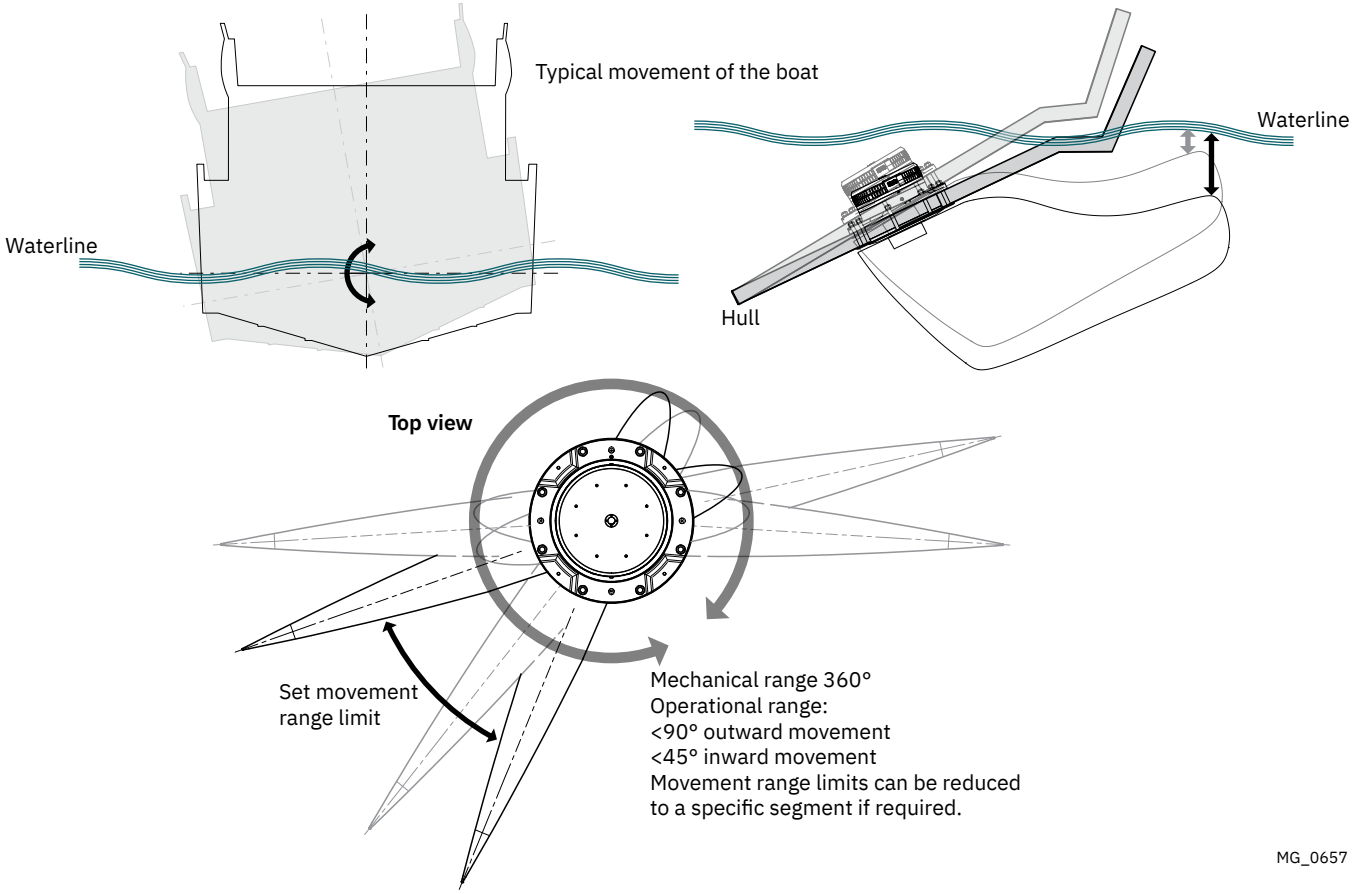

MG_0657

All calculated values are normalised, determined by equilibrium considerations and also that various coefficients are inaccurate as hull design etc will affect the actual fin effect.
Dynamic effects such as jumps/impacts with waves, back flow closing of valve etc could further increase the hull/shaft loads. Therefore all dimensioning should account for this by using a safety factor.

Sleipner curved Vector Fin design comes with additional benefits in hull safety. Any impact with the ground will not only bend the shaft backwards and outward, allowing the fin to break away with less stress on the hull.

MC_0658

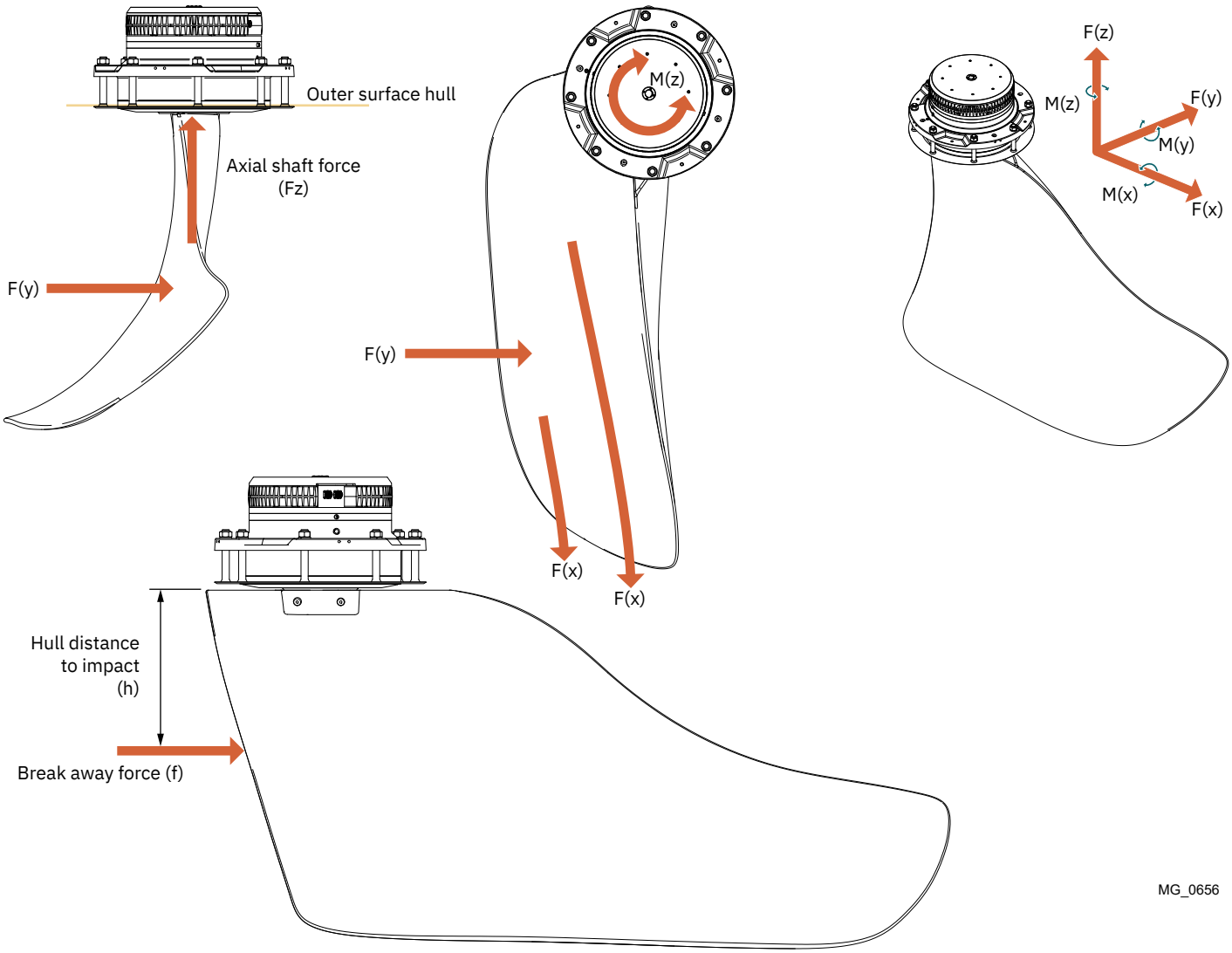

MG_0656

SPS60E							
Structural requirements V3-14		Values to be considerated individually				Break away impact force	
Speed	Max bending moment (kNm)	Mx (kNm)	My (kNm)	Mz (kNm)	Fz (kN)	h (mm)	f (kN)
20	22,6	21,2	6,1	3,7	21,0	500	90
25	24,4	23,5	6,1	3,7	21,0		

SPS60E							
Structural requirements V4-15		Values to be considerated individually				Break away impact force	
Speed	Max bending moment (kNm)	Mx (kNm)	My (kNm)	Mz (kNm)	Fz (kN)	h (mm)	f (kN)
20	27,0	25,4	8,4	3,7	25,9	500	109
30	28,2	27,7	8,4	3,7	30,6		
35	32,0	32,4	9,6	3,7	36,1		

SPS60E							
Structural requirements V4-12HS		Values to be considerated individually				Break away impact force	
Speed	Max bending moment (kNm)	Mx (kNm)	My (kNm)	Mz (kNm)	Fz (kN)	h (mm)	f (kN)
20	19	19	4,5	3	18	450	83
30	29	28	7	3	32		
35	38	36	9	3	44		
40	42	38	9	3	46		

SPS70E							
Structural requirements V4-19		Values to be considerated individually				Break away impact force	
Speed	Max bending moment (kNm)	Mx (kNm)	My (kNm)	Mz (kNm)	Fz (kN)	h (mm)	f (kN)
20	36,8	35,0	11,4	5,8	33,6	600	147
30	50,8	46,9	11,4	5,8	49,0		
35	52,9	52,5	11,9	5,8	53,4		

SPS70E							
Structural requirements V4-15HS		Values to be considerated individually				Break away impact force	
Speed	Max bending moment (kNm)	Mx (kNm)	My (kNm)	Mz (kNm)	Fz (kN)	h (mm)	f (kN)
20	29,8	27,1	9,1	5,8	31,5	500	109
30	41,1	39,4	9,6	5,8	43,8		
35	45,1	43,8	10,1	5,8	48,1		
40	49,0	48,1	10,5	5,8	52,5		

SPS70E							
Structural requirements V4-21		Values to be considerated individually				Break away impact force	
Speed	Max bending moment (kNm)	Mx (kNm)	My (kNm)	Mz (kNm)	Fz (kN)	h (mm)	f (kN)
20	41,5	40,3	12,3	5,8	36,8	700	218
25	44,8	45,1	14,0	5,8	43,8		

SPS80E							
Structural requirements V3-23		Values to be considerated individually				Break away impact force	
Speed	Max bending moment (kNm)	Mx (kNm)	My (kNm)	Mz (kNm)	Fz (kN)	h (mm)	f (kN)
20	43,9	42,35	10,7	7,0	32	700	218
25	47,4	46,6	12,6	7,0	36,0		

SPS80E							
Structural requirements V4-26		Values to be considerated individually				Break away impact force	
Speed	Max bending moment (kNm)	Mx (kNm)	My (kNm)	Mz (kNm)	Fz (kN)	h (mm)	f (kN)
20	52,9	50,75	15,8	7,0	40	700	218
30	72,3	70,9	18,0	7,0	60,0		
35	74,8	75,7	18,0	7,0	64,3		

SPS80E							
Structural requirements V4-21HS		Values to be considerated individually				Break away impact force	
Speed	Max bending moment (kNm)	Mx (kNm)	My (kNm)	Mz (kNm)	Fz (kN)	h (mm)	f (kN)
20	45,7	43,8	14,4	7,0	39,0	700	218
30	63,4	62,1	16,4	7,0	56,2		
35	67,6	67,4	16,4	7,0	61,5		
40	71,8	72,6	16,1	7,0	66,9		

SPS100E/SPS110E							
Structural requirements 4-26HS		Values to be considerated individually				Break away impact force	
Speed	Max bending moment (kNm)	Mx (kNm)	My (kNm)	Mz (kNm)	Fz (kN)	h (mm)	f (kN)
20	64,8	63,0	22,8	15,8	52,5	700	218
30	103,3	101,5	24,5	15,8	77,0		
35	110,3	107,6	25,4	15,8	86,6		
40	117,3	113,8	26,3	15,8	96		

SPS100E/SPS110E							
Structural requirements V5-31		Values to be considerated individually				Break away impact force	
Speed	Max bending moment (kNm)	Mx (kNm)	My (kNm)	Mz (kNm)	Fz (kN)	h (mm)	f (kN)
15	61,8	57,8	17,3	15,8	38,2	800	243
20	84,9	81,4	19,3	15,8	45,9		
25	90,1	87,5	16,1	15,8	50,1		
30	105,5	103,4	15,8	15,8	56,9		

SPS120E							
Structural requirements V5-39		Values to be considerated individually				Break away impact force	
Speed	Max bending moment (kNm)	Mx (kNm)	My (kNm)	Mz (kNm)	Fz (kN)	h (mm)	f (kN)
15	TBD	TBD	TBD	TBD	TBD	800	243
20	TBD	TBD	TBD	TBD	TBD		
25	TBD	TBD	TBD	TBD	TBD		
30	TBD	TBD	TBD	TBD	TBD		

MC_0899_01

A) Actuator lifting point (Threads 12x1,75)
B) Power cable connectors
C) Condensation drain hole
D) Oil fill (Tool: Inhex 6mm)
E) Ground wire attachment
F) Service lock (Tool: Inhex 8mm)
G) Epoxy injection hole (x4)
H) Oil drainage
I) Hull plate
J) Actuator bolts
K) Actuator fin hub
L) Magnet plug / drainage hole

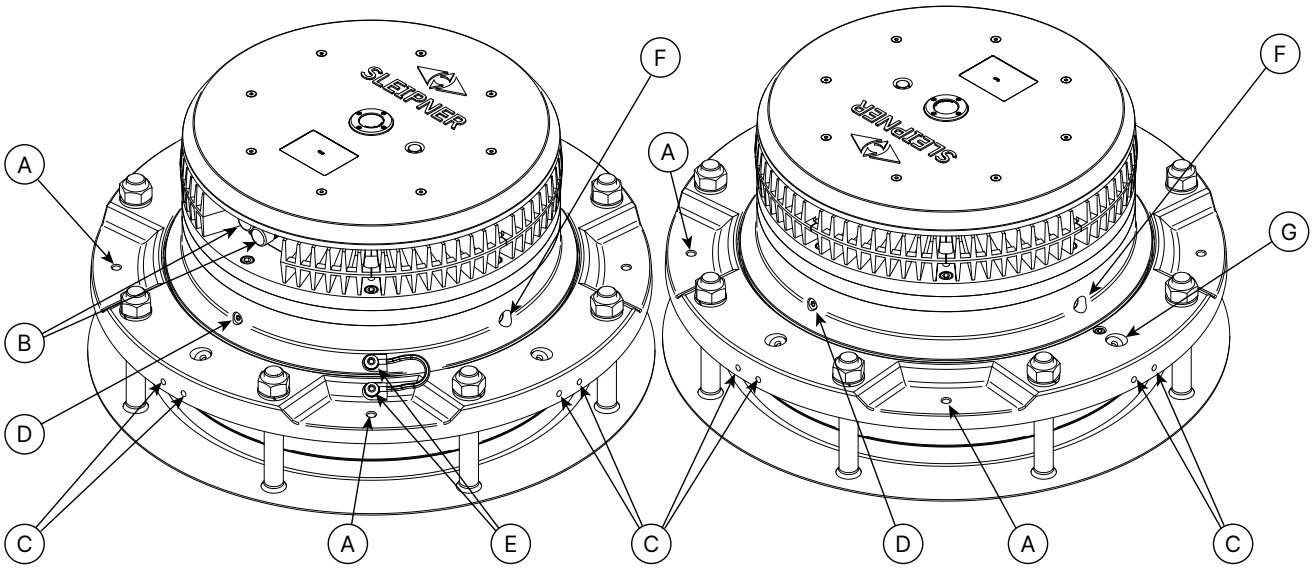

MG_0644

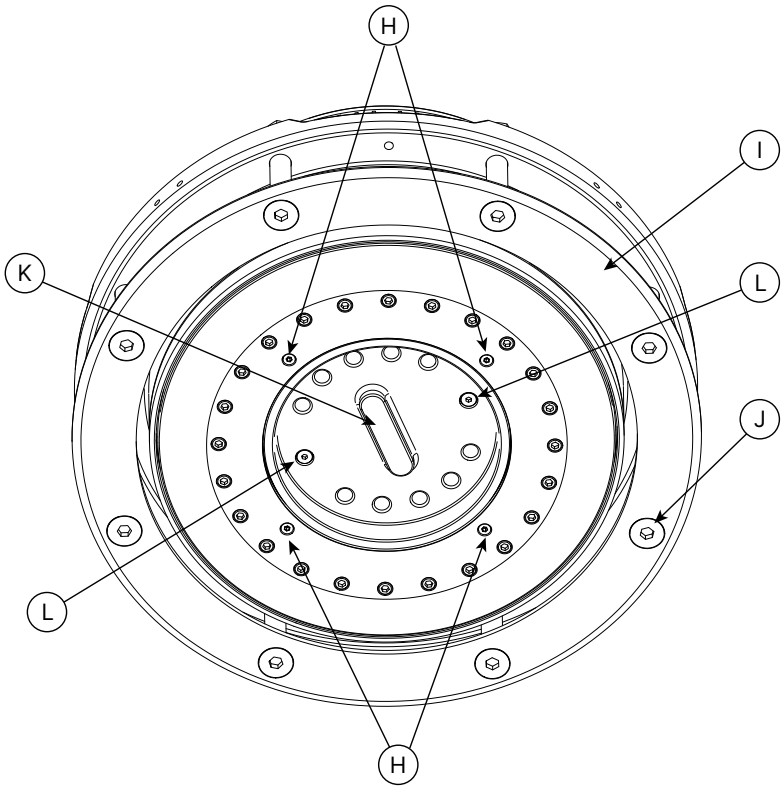

WARNING

When modifying the hull it is important to seek recommendations from a naval architect. Details for reinforcing/ strengthening the hull for the stabilizer installation must be in accordance with a naval ships architects

CAUTION

Take necessary measures to isolate noise from the actuator according to current standards if the installation is close to living areas.

Define the optimal position of the stabilizer fins.

1. Drill a pilot hole at the fin shaft centre line position externally through the yachts hull.

2. Using the pilot hole as centre line mark and cut hole from inside the boat using a suitable cutting Jig & tool.

Through Hole Dimensions							
SPS60E		SPS70E		SPS80E		SPS100E	
mm	inch	mm	inch	mm	inch	mm	inch
422 ± 4	16.6 ± 0.16	472 ± 4	18.6 ± 0.16	555 ± 5	21.9 ± 0.2	647 ± 5	25.5 ± 0.2

3. Adjust the surrounding hull to the above thickness (Sealant included) and ensure that the internal and external surfaces are parallel and flat.

Hull Thickness	SPS60E		SPS70E		SPS80E		SPS100E	
	mm	inch	mm	inch	mm	inch	mm	inch
Minimum *(Ensures secure sealing between the hull and actuator)*	55	2.2	74	2.9	97	3.8	140	5.5
Recommended/ Target	60	2.4	80	3.1	105	4.1	150	5.9
Maximum	62	2.4	82	3.2	107	4.2	152	6

MC_0742

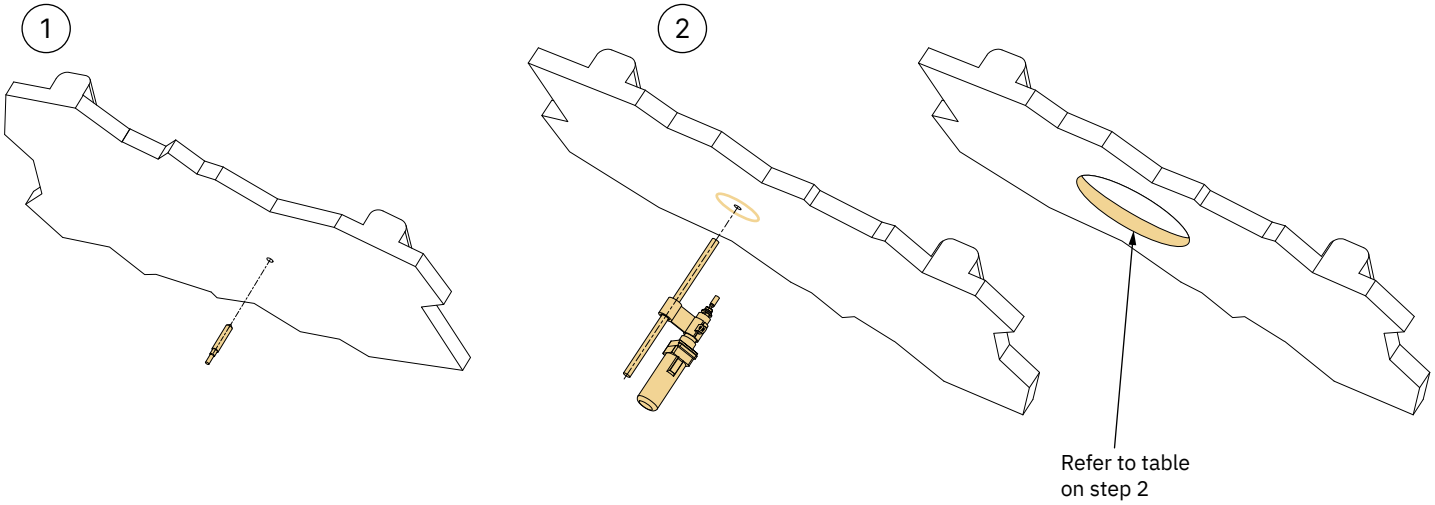

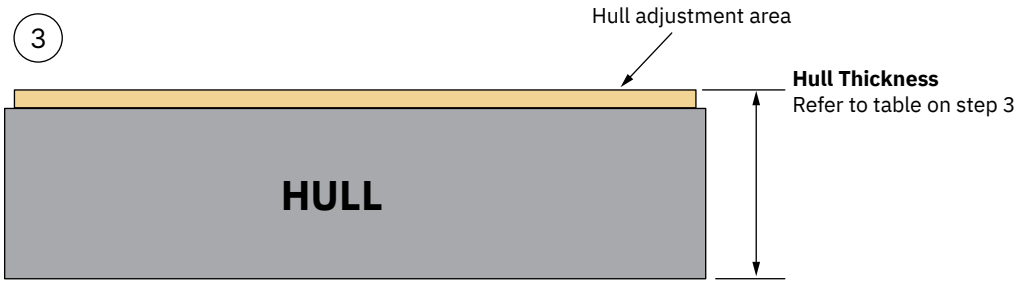

MG_0665

4. Mark the positions of the holes for the securing bolts. ***(Note: Use the external hull plate as a template.)***

Dimension code	Dimension description	SPS60E		SPS70E		SPS80E		SPS100E	
		mm	inch	mm	inch	mm	inch	mm	inch
ØA	Hull plate external diameter	570	22.4	620	24.4	712	28	830	32.7
ØB	Hole positional diameter	504	19.8	554	21.8	640	25.2	755	29.7
ØC	Hull plate internal diameter	431	17	480.5	18.9	567	22.3	659	25.9
ØD	Hull plate hole diameter	26	0.8	26	1	31.9	1.3	32.3	1.3
Diameter of the drilled hole in the hull. (See step 6)		25	1	25	1	29	1.1	29	1.1

5. Drill a pilot hole using the external hull plate as a guide. ***Note: Drill pilot hole from inside the hull.***

MC_0742

6. Complete the drilling to the defined hole diameter required. ***Note: Drill final hole from outside the hull.***

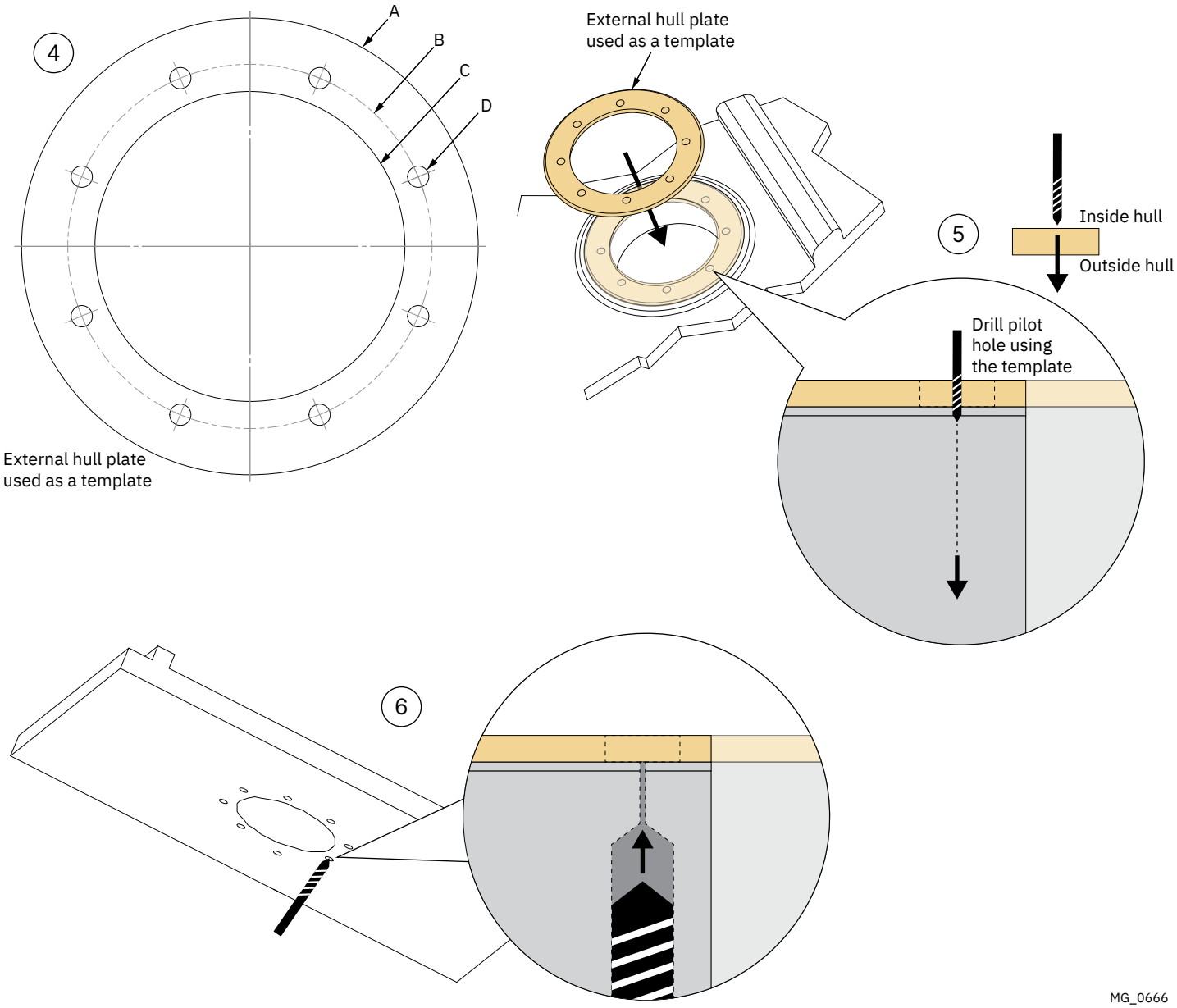

MG_0666

7. Countersunk all holes to allow space for bolt heads and sealant without damaging the hull.

8. At the area inside the vessel where the 4 injection filler ports are, create a chamfered edge.
Note: The chamfer is to ensure an open area for the future injection of filler.

MC_0742

	a°	b
SPS60	90°	26mm
SPS70	90°	26mm
SPS80	60°	31.9mm
SPS100	60°	32.3mm

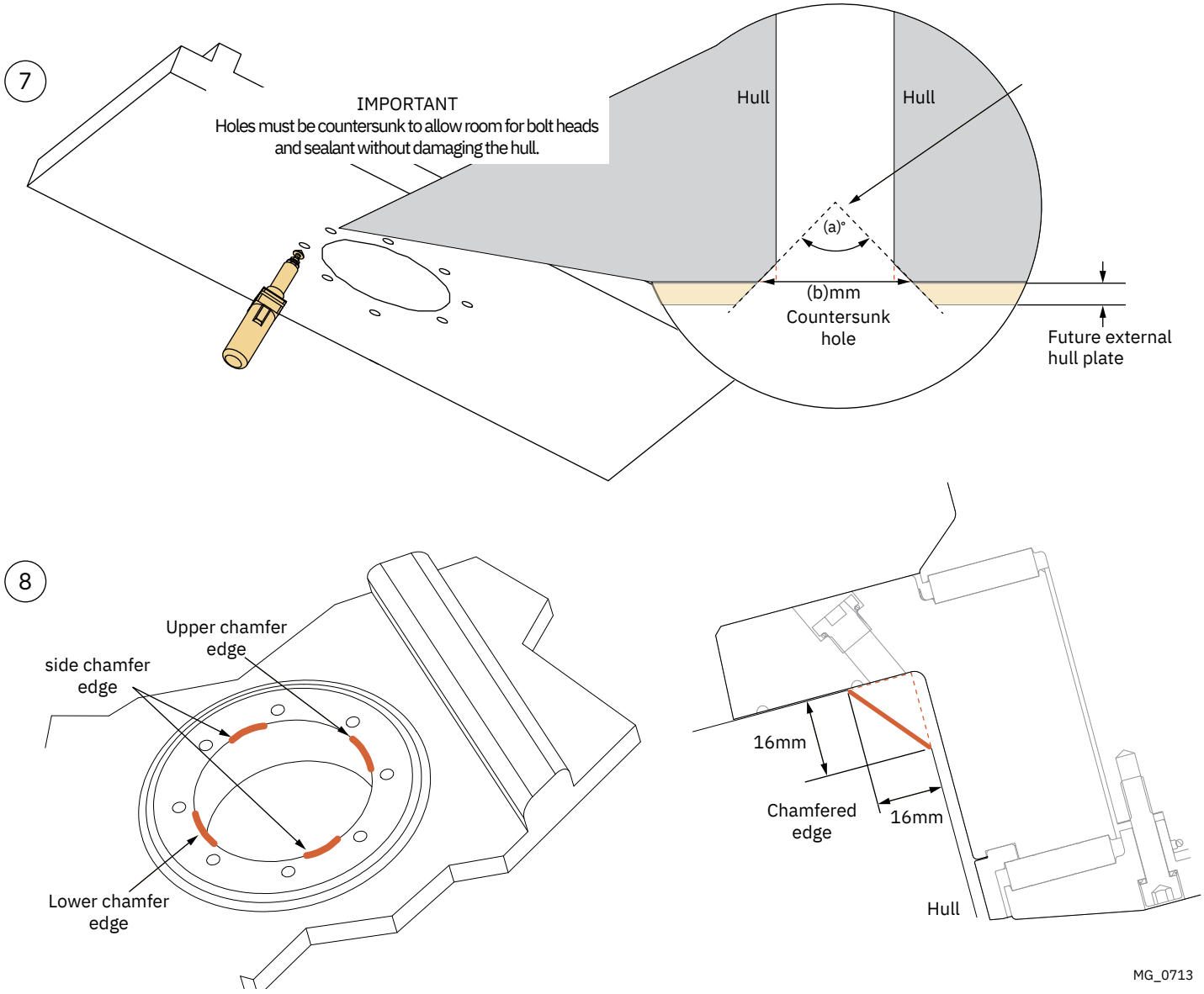

MG_0713

MOUNTING OF THE STABILIZER ACTUATOR ASSEMBLY

Note: Steps 9-17 must be finalized within the cure time of the watertight sealant being used. Step 18 can be initiated only after the sealant is cured.

9. Apply watertight sealant to the mating surface of the hull and the actuator inside the boat.
   Note: Sealant must be compatible with hull material. A naval architect/Boat builder must confirm this.

10. Lower the Stabilizer Actuator Assembly into the hulls actuator hole.
    Note: Use the actuator lifting eyes to thread lifting slings combined with a mechanical support to assist in a controlled lowering of the actuator.

Lifting eye threads:

Actuator	SPS60E	SPS70E	SPS80E	SPS90E	SPS100E	SPS110E	SPS120E
Ø	12mm	12mm	12mm	16mm	16mm	16mm	16mm

IMPORTANT NOTES:

- **Ensure that at least one of the oil drainage holes are at the lowest point of the installation angle. (*Reference A*).**
- **Ensure that the condensation drain holes (*Reference B*) are not covered by sealant or other material. Condensation on the actuator will flow into the void between the motor and hull assemblies, and must drain out through these holes. The condensation drain holes must always be at the actuators lowest point.**
- **Use a mechanical support to lower the actuator into position, as the actuator weight is high. Attach two safely slings through the bolt hole and remove just before lowering the actuator into its final position.**
- **Ensure at least one of the four oil drainage holes is at the lowest of of the installation angle.**

The condensation drain holes are always positioned straight above the oil dran hole, and there are four sets of oil- and condensation drain holes with a mutual offset of 90 degrees between the sets.

MC_0742

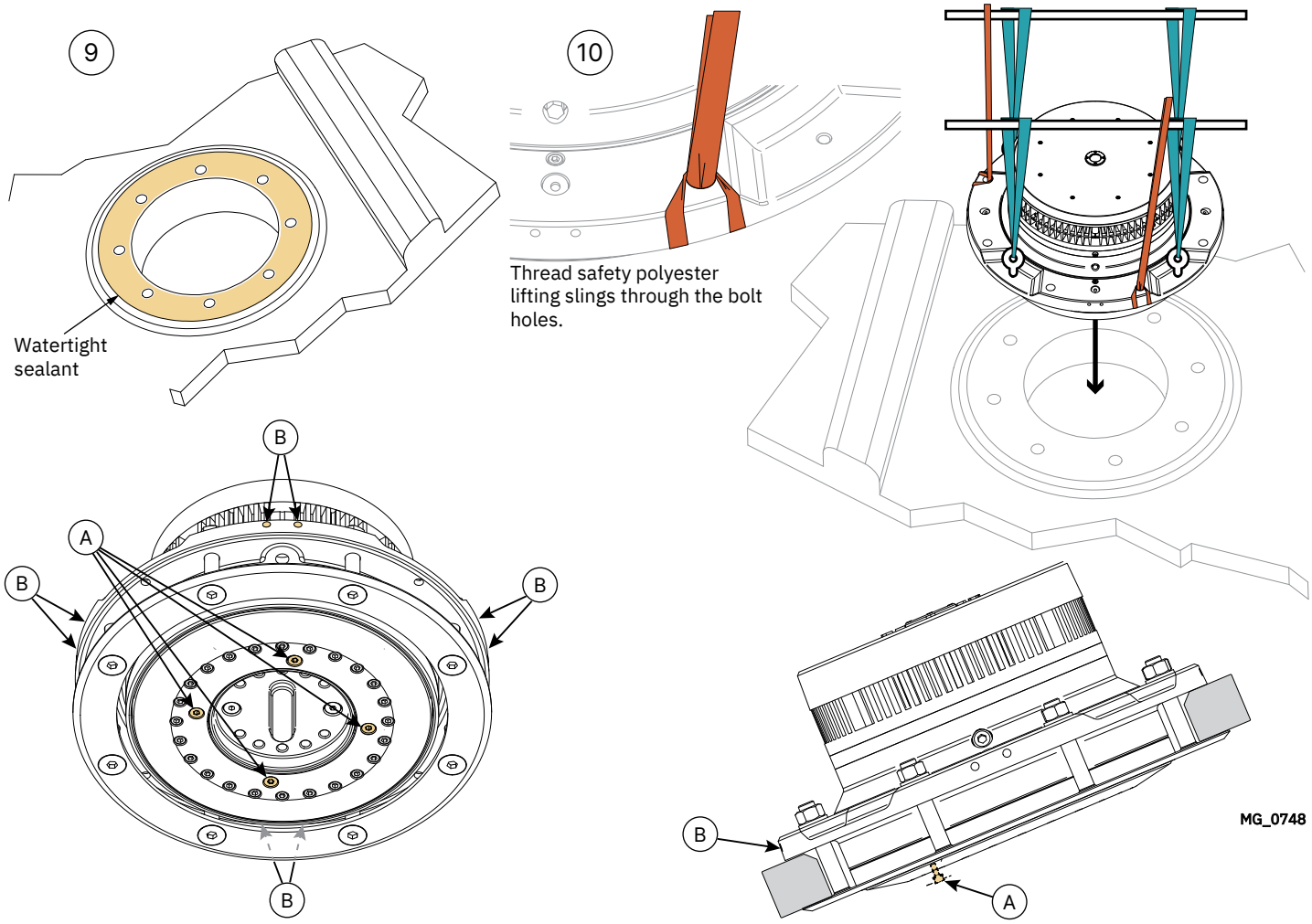

MOUNTING OF THE STABILIZER ACTUATOR ASSEMBLY

11. Ensure the actuator shaft core sits concentric to the hole. Ensure the 4 filler compound injection ports are over the chamfered edge and not obstructed.
    Note: Remove the injection port plugs to inspect the actuator sits over the chamfered edge and is clear from obstruction for the injection process.

    Note: Do not throw away injection plugs as they are needed later during installation.

    Scan the QR code for an injection procedure video.

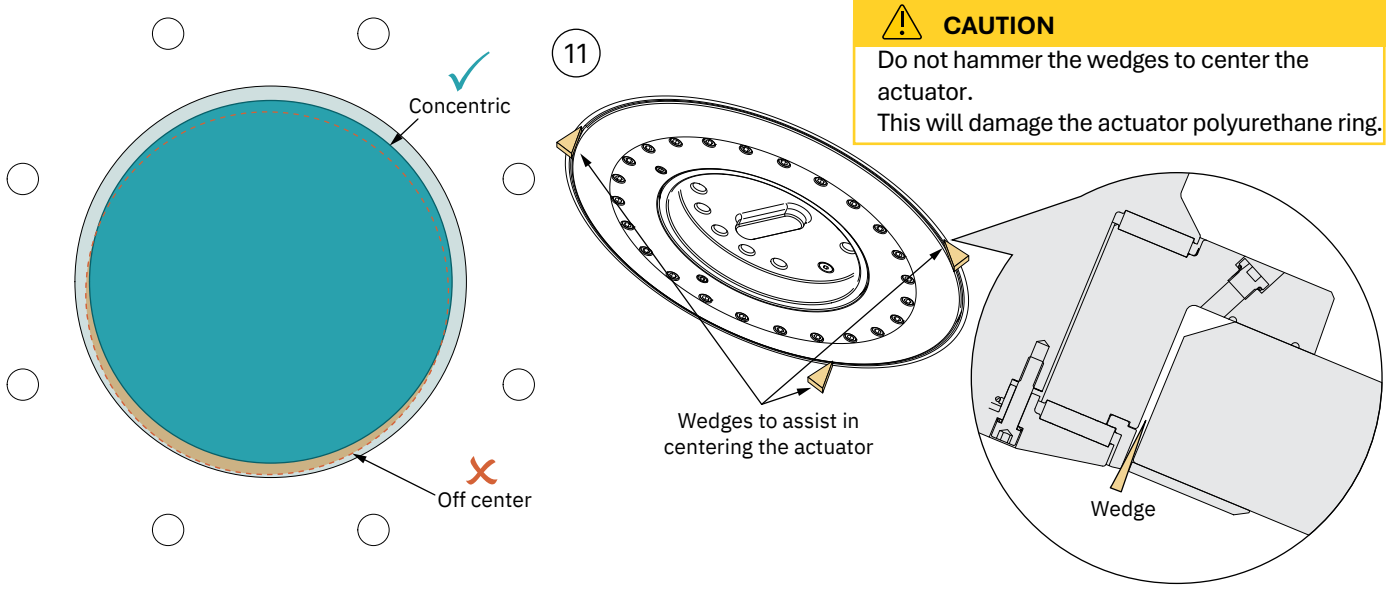

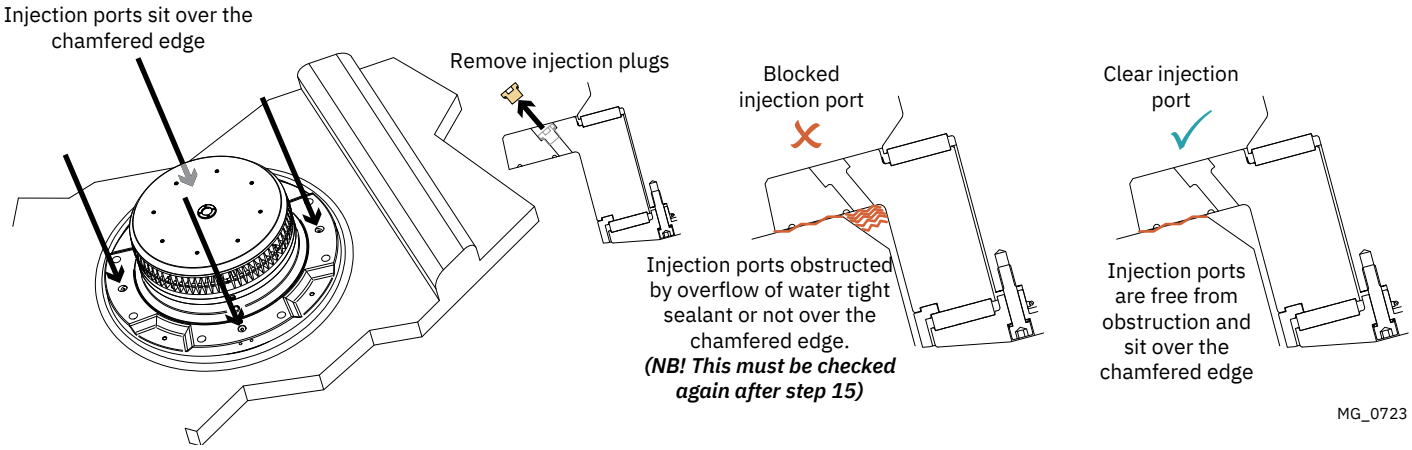

MOUNTING OF THE STABILIZER ACTUATOR ASSEMBLY

12. Apply watertight sealant to the Hull plate, can also be applied directly on the hull. Additional apply sealent on the bolt countersunk area to achieve proper sealing between bolt head, Hull plate and to the plate securing bolts. MC_0742

13. Place the Hull plate over the Stabilizer shaft & onto the external hull mounting surface.

14. Insert actuator bolts with watertight sealant to the Hull plate.

15. Tighten & torque load the securing bolt nuts with washers in two stages following the defined number order to avoid misalignment.

Stage 1: Fasten each bolt to the defined tightening vaule and order.
Stage 2: Fasten each bolt to the defined tightening vaule and order.

	SPS60E	SPS70E	SPS80	SPS100E	SPS120E
Stage 1	30Nm	30Nm	30Nm	30Nm	30Nm
Stage 2	160Nm	160Nm	250Nm	250Nm	250Nm

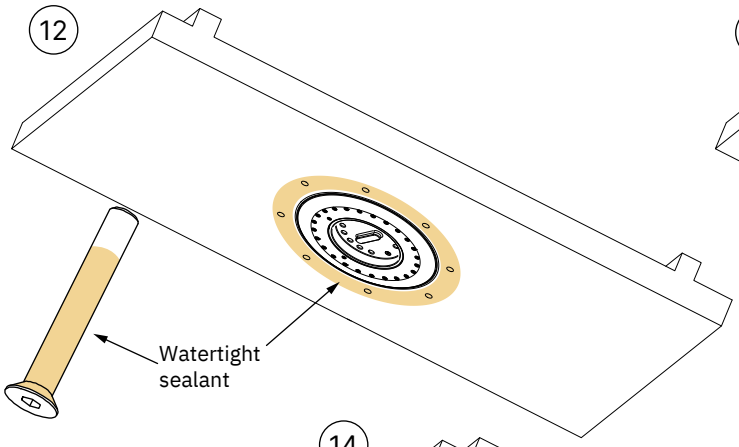

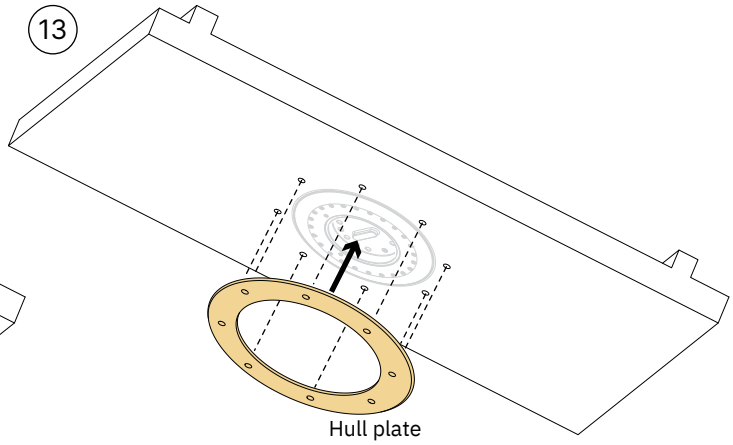

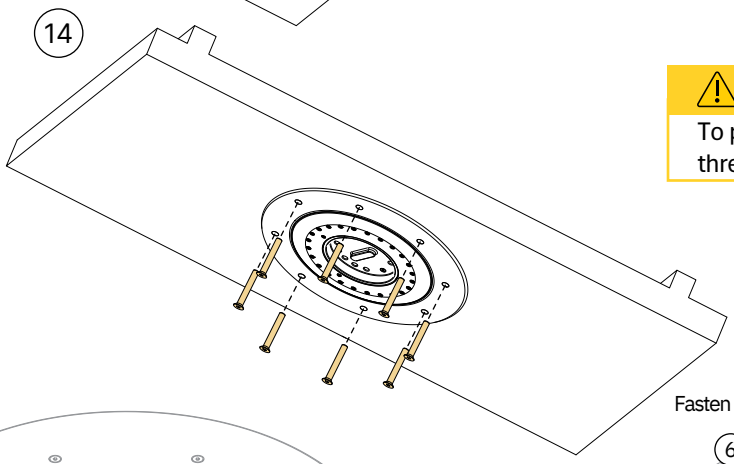

CAUTION

To prevent galling, add grease to the nut threads and fasten slowly.

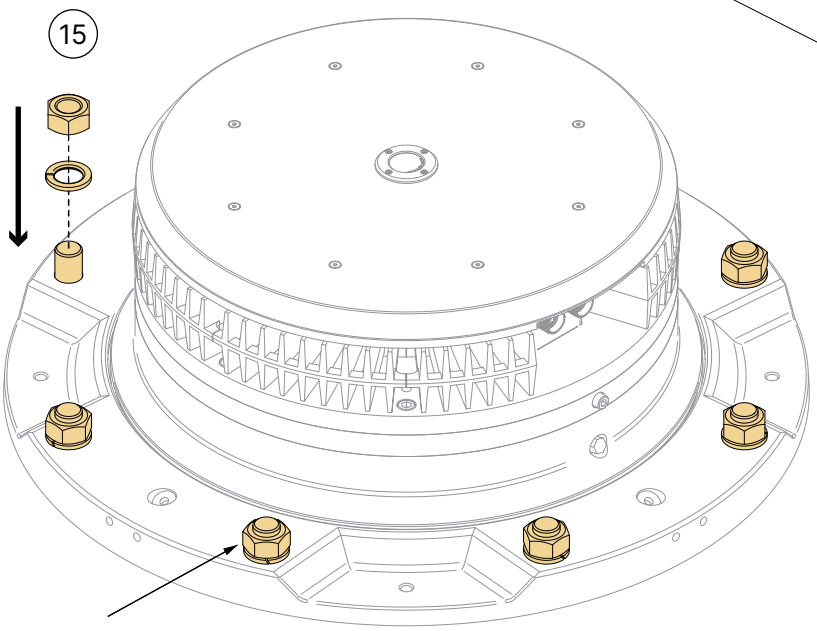

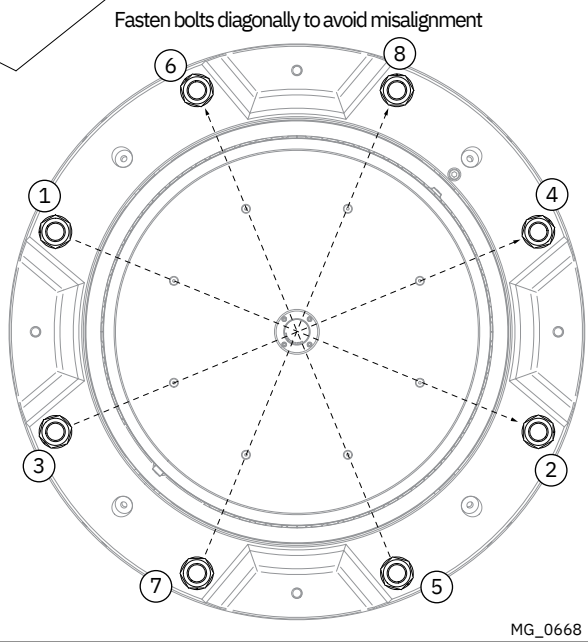

MG_0668

16. Clean away any overflowed watertight sealant if necessary and seal the lower gap with a EPDM cord. Push the EPDM cord 25/28mm (for SPS60 / SPS80), past the actuator polyurethane ring (See illustration below). ***(Note: The polyurethane ring is identifiable as a red ring on the lower actuator.)***

17. Fill the lower void with polyurethane sealant or similar to create a water tight seal between the hull and the actuator. Sealant must be completely cured before proceeding to the next step.

MC_0742

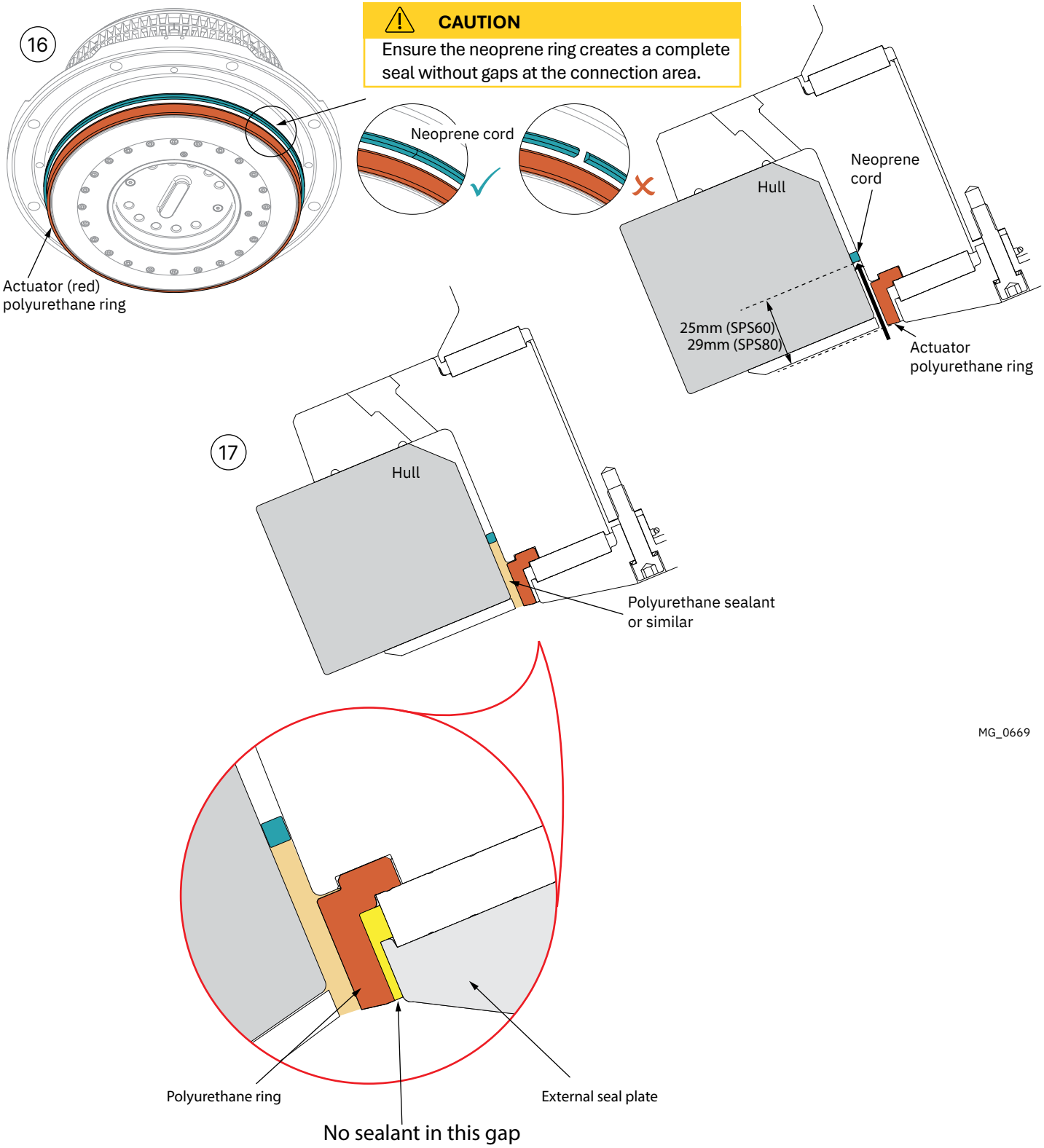

MG_0669

18. Remove the blind plugs, insert the injection plugs with thread tape added and attach the hoses to the injection plugs.
Inject filler compound through the lowest injection hole on the actuator base plate.
Continue injecting the filler compound until it flows out of the upper injection hole.

Approved filler compounds
Chock Fast Orange PR610TCF
Steel Blue
Epocast 36
Locktite PC7202

Note: Commonly the actuator is installed on a slight angle. The lower injection port is defined as lowest port on the base plate.

a. Press the filler compound into the lowest point.
b. When clean filler compound without bubbles comes out of drain port b close the drain ports.
c. Continue until half of the last (top) drain is full, to allow flow back during the curing process.

Note: Recommend hose length is 500mm for the upper injection hose to allow flow back during the curing process. MC_0742

19. After the filler compound has hardened, remove all four hoses and insert injection plugs.

CAUTION

After injection is complete. Remove all remaining compound containers from the vessel due to fire risk. (exotherm curing process)

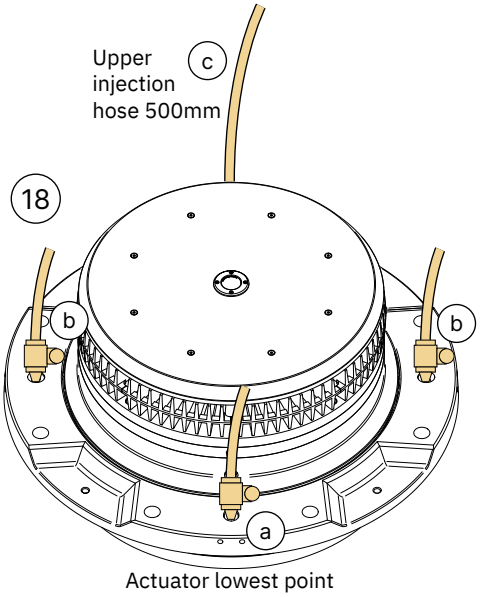

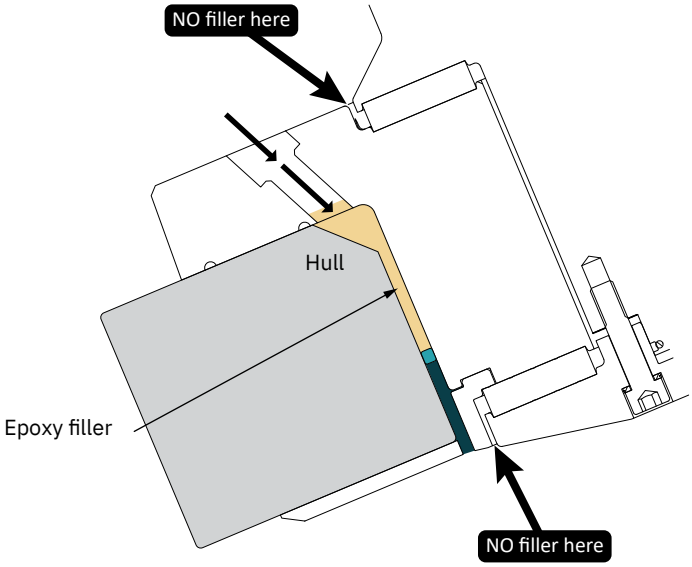

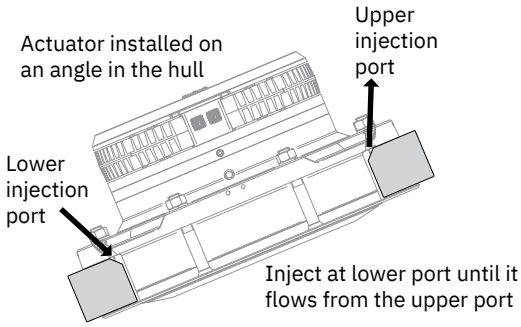

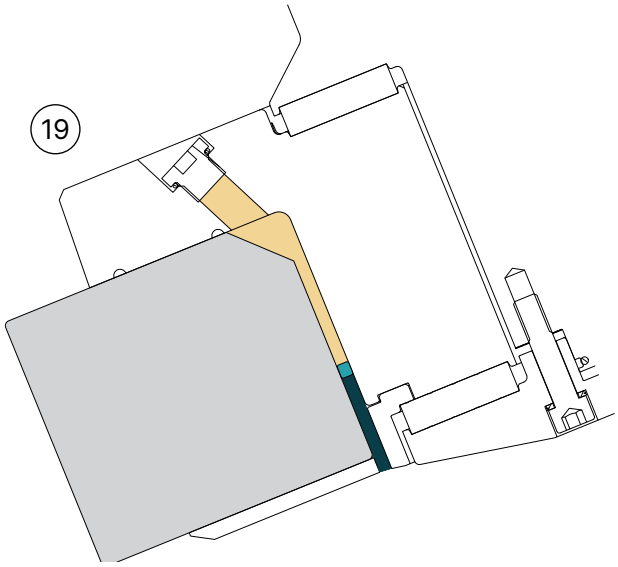

WARNING

When modifying the hull it is important to seek recommendations from a naval architect. Details for reinforcing/ strengthening the hull for the stabilizer installation must be in accordance with a naval ships architects

CAUTION

Take necessary measures to isolate noise from the actuator according to current standards if the installation is close to living areas.

Define the optimal position of the stabilizer fins.

1. Drill a pilot hole at the fin shaft centre line position externally through the yachts hull.

2. Using the pilot hole as centre line mark and cut hole from inside the boat using a suitable cutting Jig & tool.

SPS90E		SPS110E		SPS120E	
mm	inch	mm	inch	mm	inch
555 ± 5	21.9 ± 0.2	647 ± 5	25.5 ± 0.2	647 ± 5	25.5 ± 0.2

Hull Thickness	SPS90E		SPS110E		SPS120E	
	mm	inch	mm	inch	mm	inch
Minimum *(Ensures secure sealing between the hull and actuator)*	248	9.7	248	9.7	248	9.7
Recommended/ Target	256	10	256	10	256	10
Maximum *(Avoids the risk of applying sealant between the fin hub and actuator)*	258	10.1	258	10.1	258	10.1

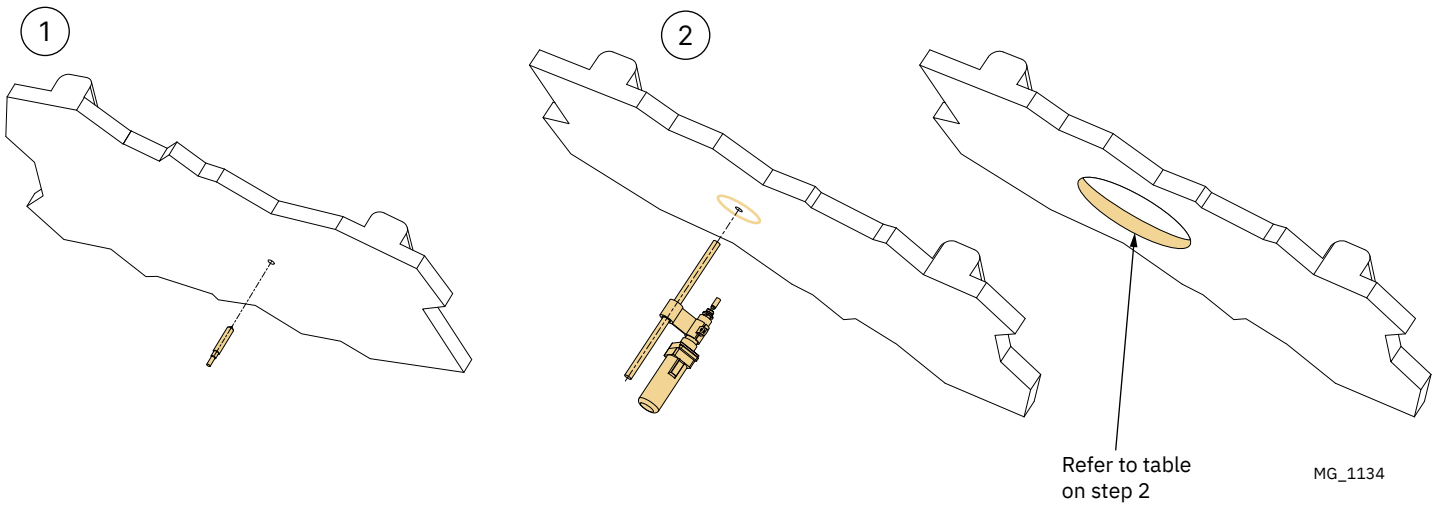

3. Mark the positions of the holes for the securing bolts according to the illustration below.

Dimension code	Dimension description	SPS90E		SPS110E		SPS120E	
		mm	inch	mm	inch	mm	inch
ØA	Hole positional diameter	640	25.2	755	29.7	755	29.7
ØB	Hole diameter	25	1.0	25	1.0	25	1.0

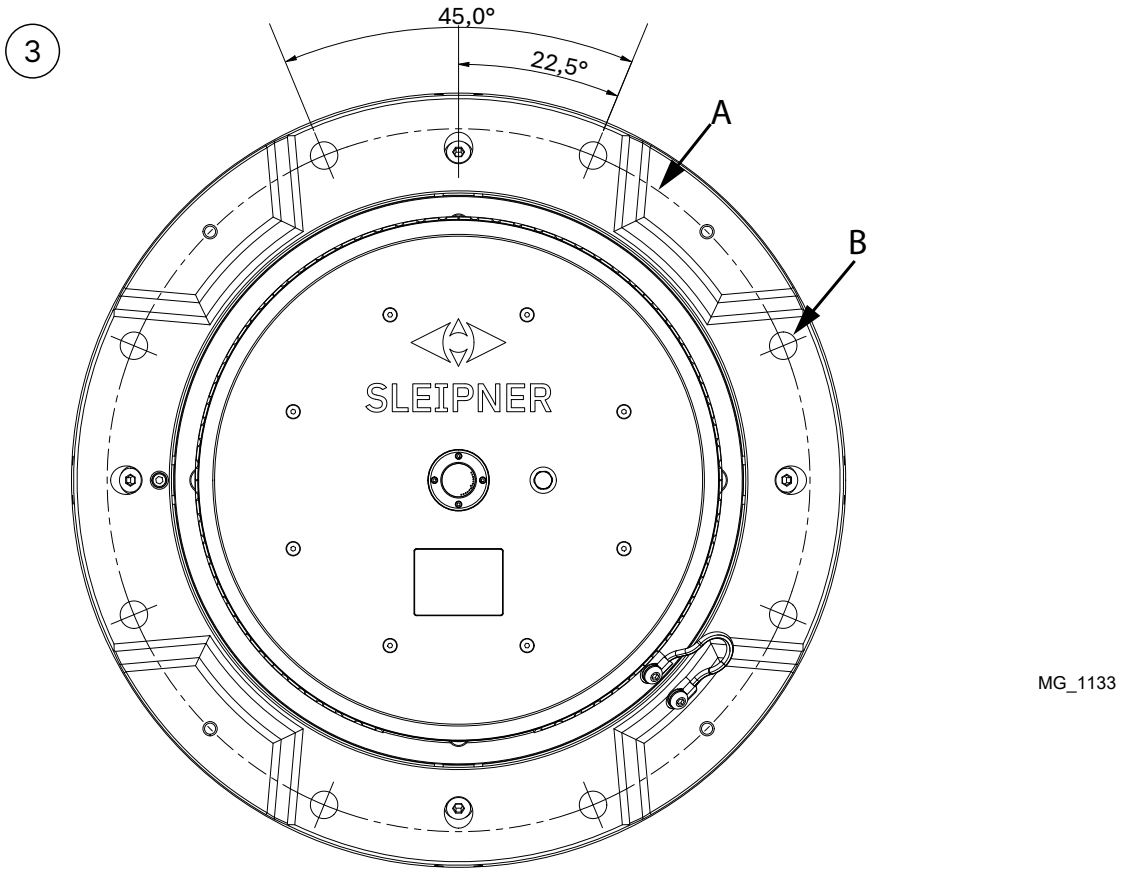

4. At the area inside the vessel where the 4 injection filler ports are, create a chamfered edge.
   Note: The chamfer is to ensure an open area for the future injection of filler.

MC_1133

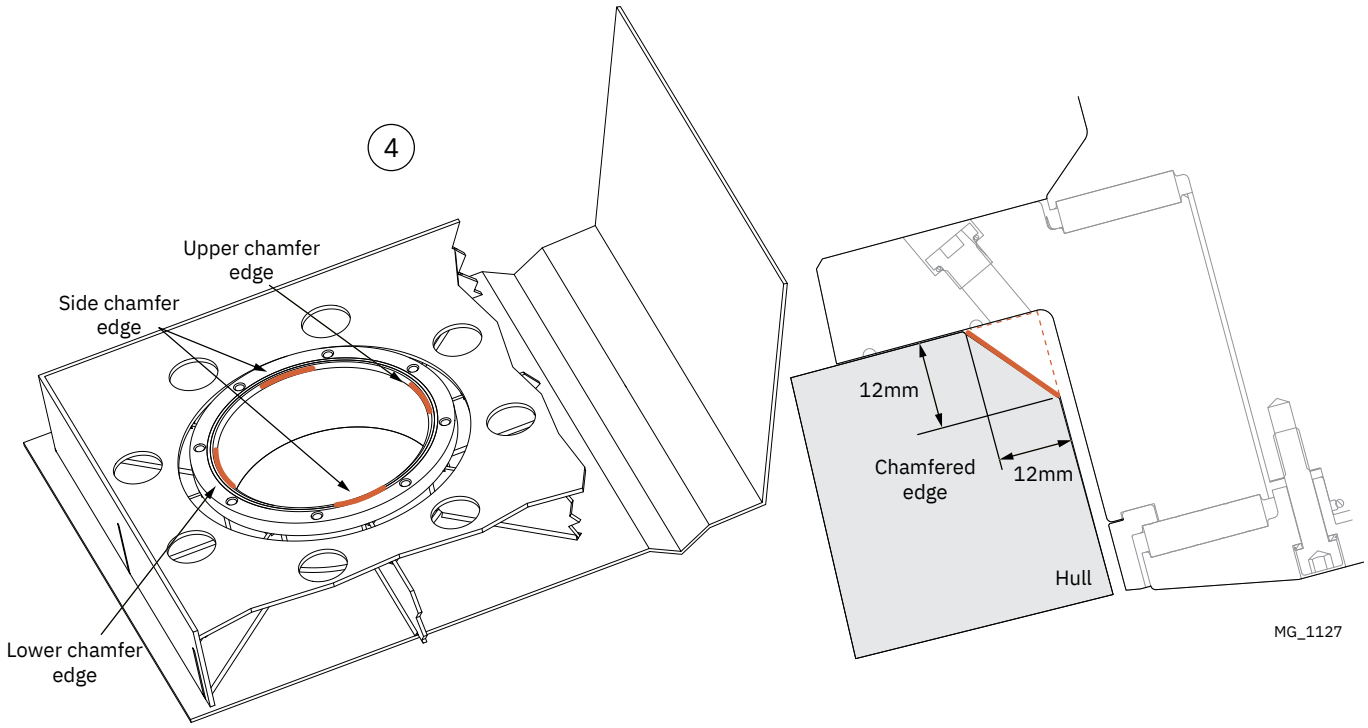

MOUNTING OF THE STABILIZER ACTUATOR ASSEMBLY

MC_1133

Note: Steps 9-17 must be finalized within the cure time of the watertight sealant being used. Step 18 can be initiated only after the sealant is cured.

5. Apply watertight sealant to the mating surface of the hull and the actuator inside the boat.
   Note: Sealant must be compatible with hull material. A naval architect/Boat builder must confirm this.

6. Lower the Stabilizer Actuator Assembly into the hulls actuator hole.
   Note: Use the actuator lifting eyes to thread lifting slings combined with a mechanical support to assist in a controlled lowering of the actuator.

Lifting eye threads:

Actuator	SPS90E	SPS110E	SPS120E
Ø	16mm	16mm	16mm

IMPORTANT NOTES:

- **Ensure that at least one of the oil drainage holes are at the lowest point of the installation angle. (*Reference A*).**
- **Ensure that the condensation drain holes (*Reference B*) are not covered by sealant or other material. Condensation on the actuator will flow into the void between the motor and hull assemblies, and must drain out through these holes. The condensation drain holes must always be at the actuators lowest point.**
- **Use a mechanical support to lower the actuator into position, as the actuator weight is high. Attach two safely slings through the bolt hole and remove just before lowering the actuator into its final position.**
- **Ensure at least one of the four oil drainage holes is at the lowest of of the installation angle.**

The condensation drain holes are always positioned straight above the oil dran hole, and there are four sets of oil- and condensation drain holes with a mutual offset of 90 degrees between the sets.

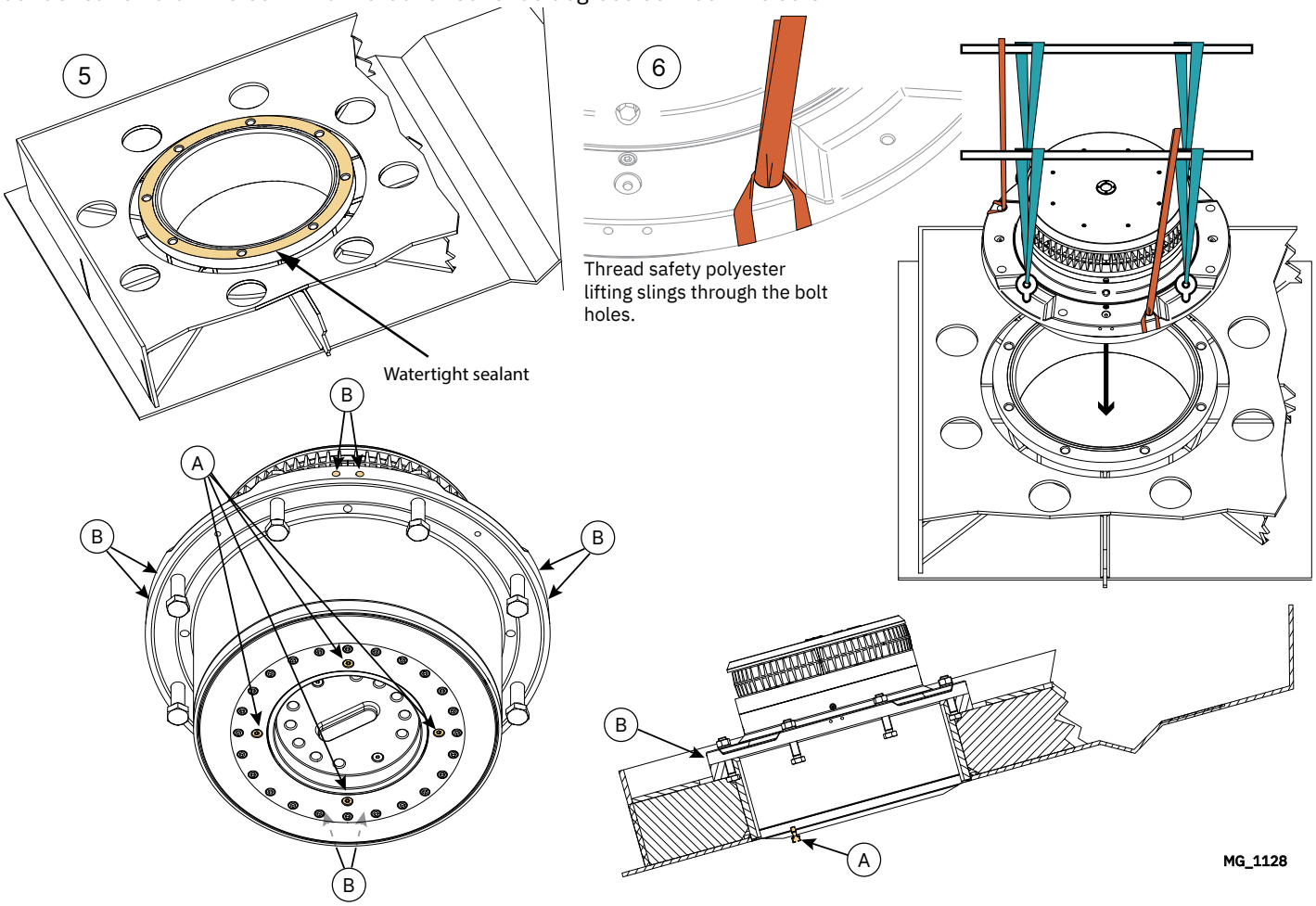

MOUNTING OF THE STABILIZER ACTUATOR ASSEMBLY

MC_1133

7. Ensure the actuator shaft core sits concentric to the hole. Ensure the 4 filler compound injection ports are over the chamfered edge and not obstructed.
   Note: If already mounted, remove the injection port plugs to inspect the actuator sits over the chamfered edge and is clear from obstruction for the injection process.

   Note: Do not throw away injection plugs as they are needed later during installation.

   Scan the QR code for an injection procedure video.

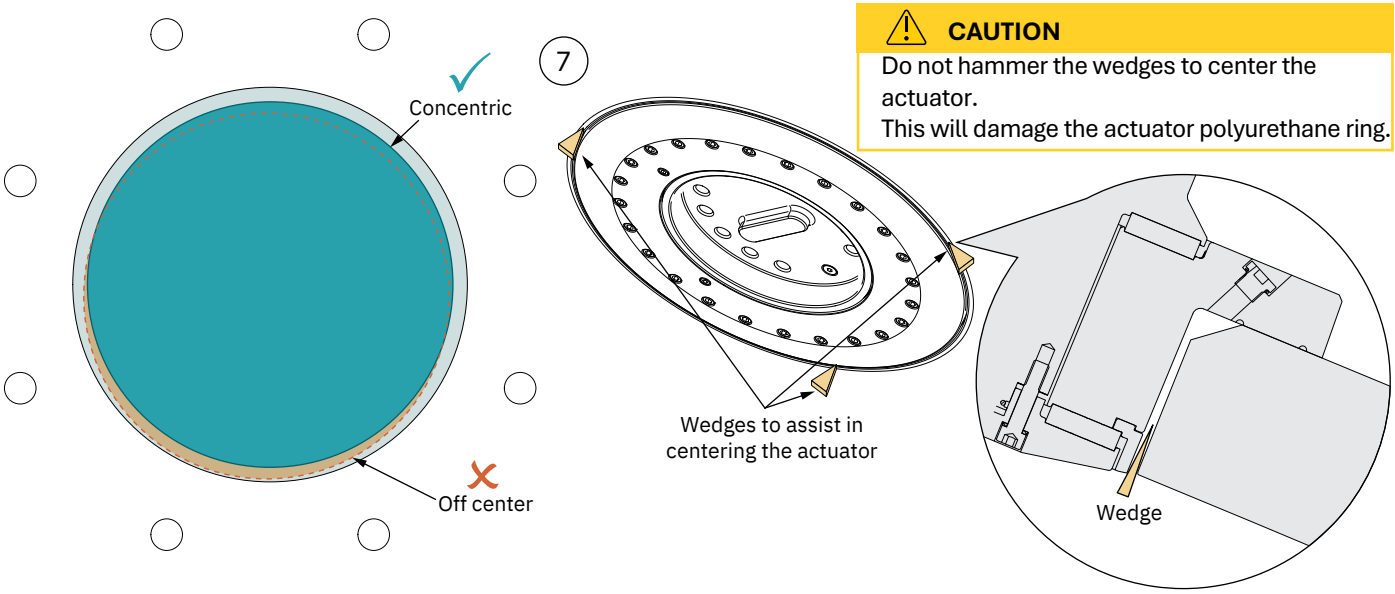

CAUTION
Do not hammer the wedges to center the actuator.
This will damage the actuator polyurethane ring.

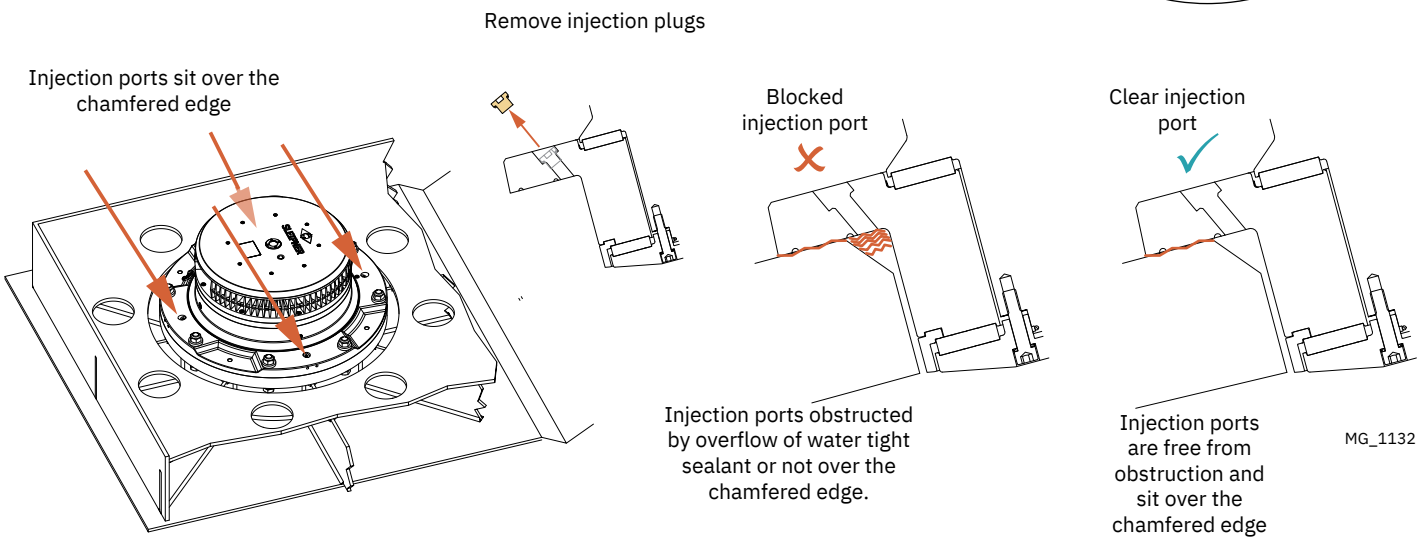

MOUNTING OF THE STABILIZER ACTUATOR ASSEMBLY

MC_1133

- Tighten & torque load the securing bolt nuts with washers in two stages following the defined number order to avoid misalignment.
  Note: All specified bolts shall be secured using a suitable thread locking compound. The thread locker type and strength shall be defined by a qualified Naval Architect and shall be compatible with A4 stainless steel fasteners.

Stage 1: Fasten each bolt to the defined tightening value and order.
Stage 2: Fasten each bolt to the defined tightening value and order.

Tighten	SPS90E	SPS110E	SPS120E
	Nm	Nm	Nm
Stage 1	30	30	30
Stage 2	520	520	520

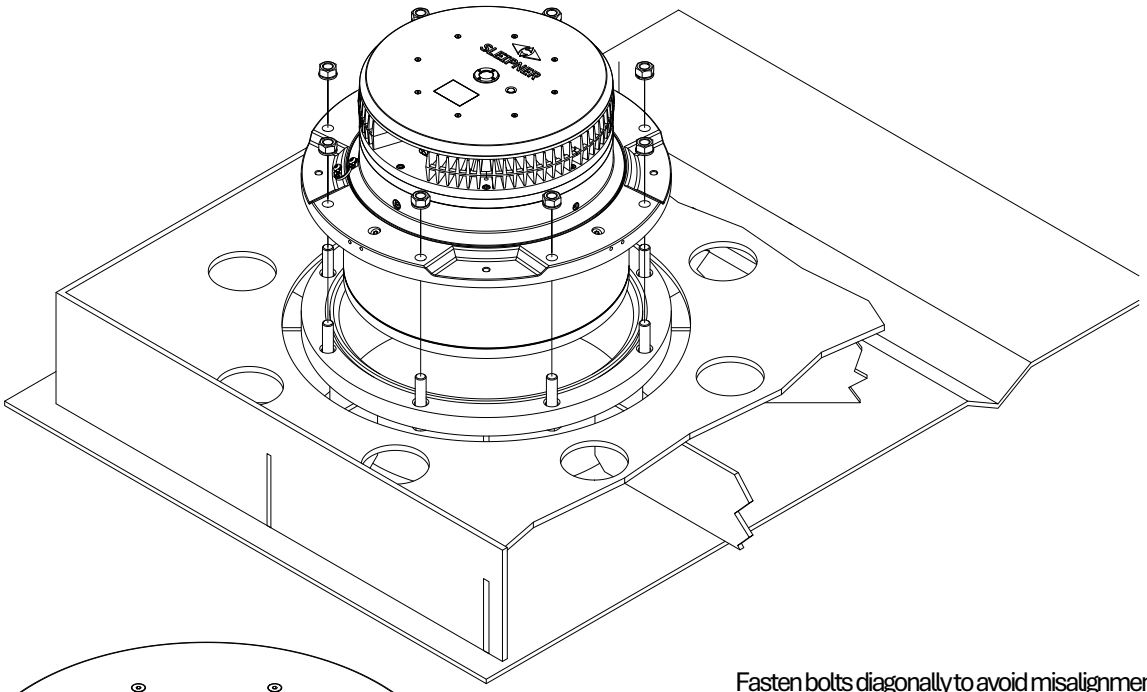

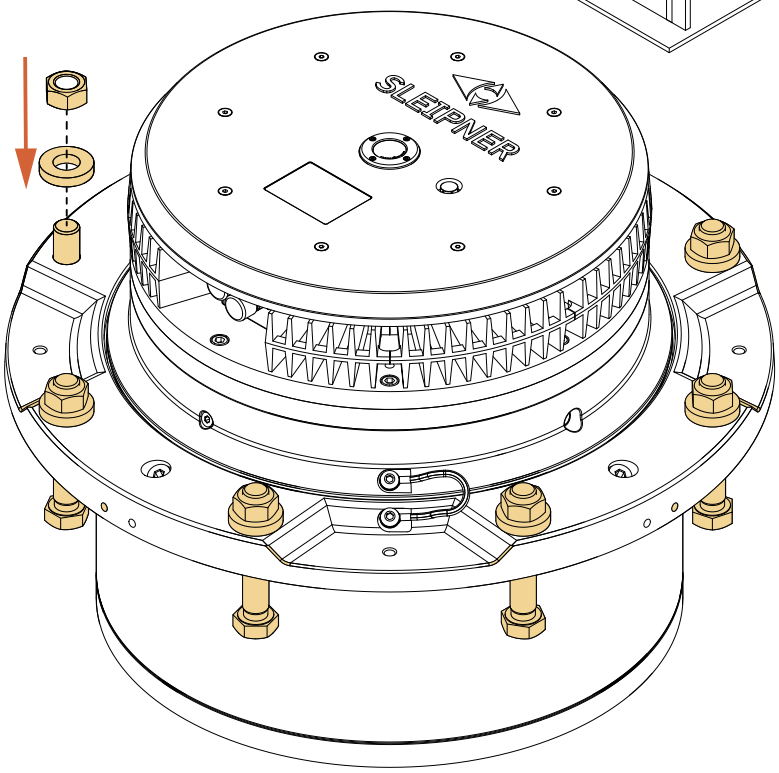

Fasten bolts diagonally to avoid misalignment

MG_1129

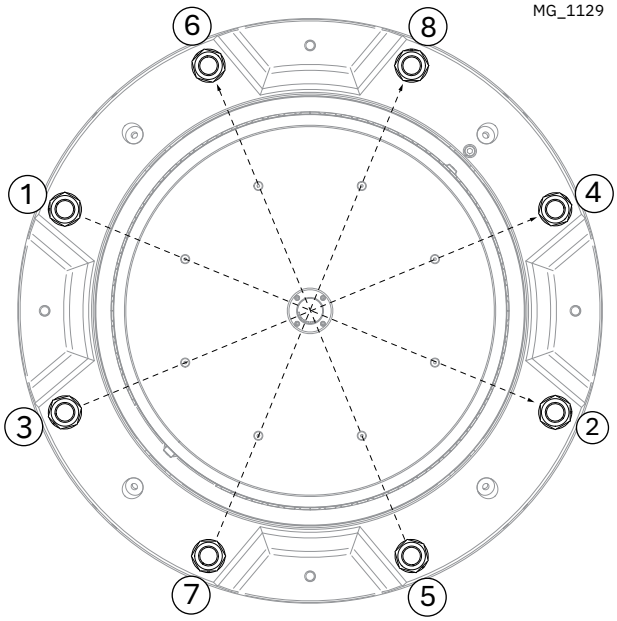

8. Clean away any overflowed watertight sealant if necessary and seal the lower gap with a EPDM cord. Push the EPDM cord past the actuator polyurethane ring (See tableand illustration below).
   Note: The polyurethane ring is identifiable as a red ring on the lower actuator.

9. Fill the lower void, if needed in several steps, with polyurethane sealant or similar to create a create a water tight seal between the hull and the actuator. Sealant must be completely cured before proceeding to the next step. MC_1133

CAUTION

Ensure the EPDM cord creates a complete seal without gaps at the connection area.

	SPS90E	SPS110E	SPS120E
EPDM insert	29mm	29mm	29mm

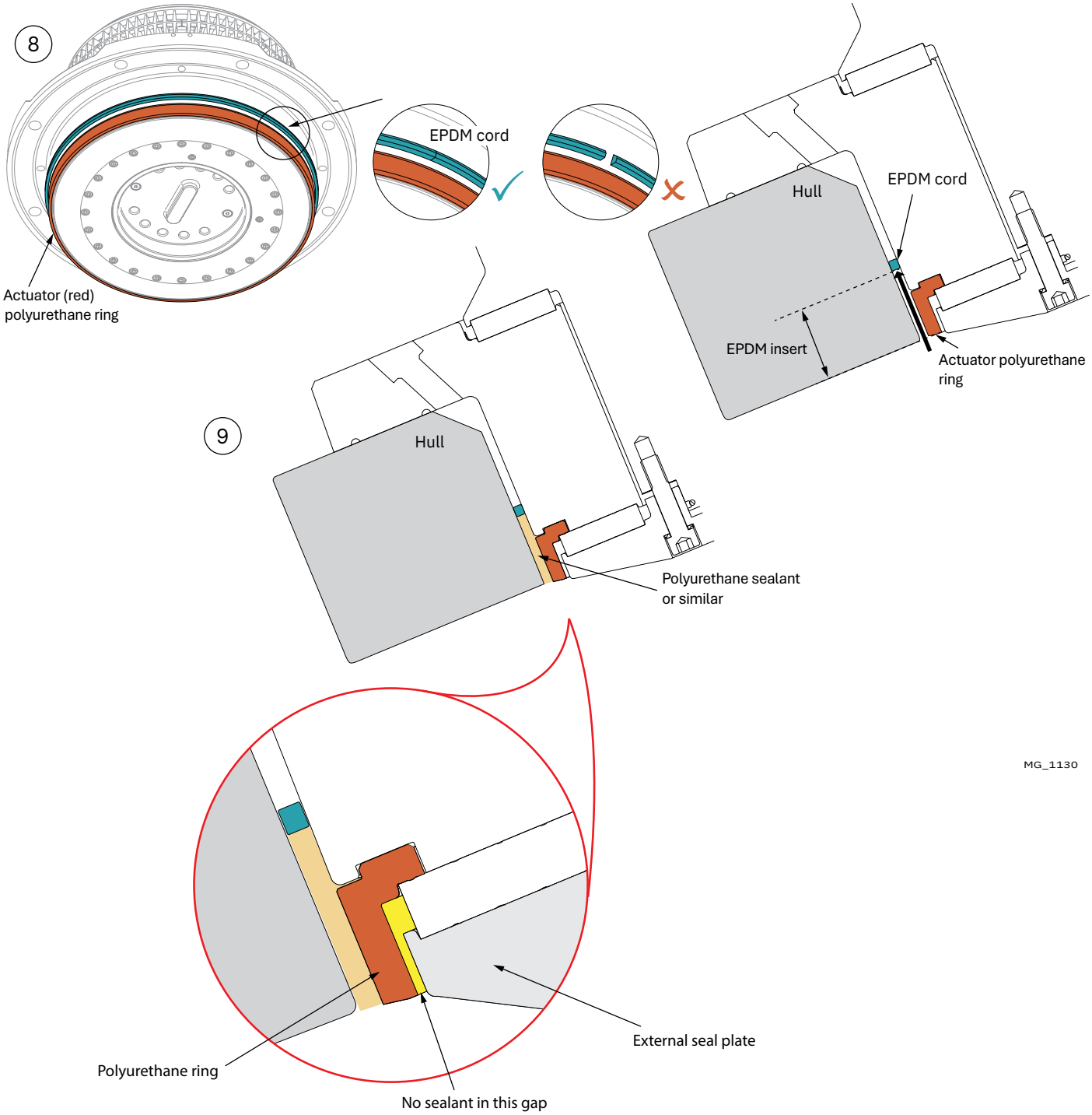

10. Insert the injection plugs with thread tape added and attach the hoses to the injection plugs.
    Inject filler compound through the lowest injection hole on the actuator base plate.
    Continue injecting the filler compound until it flows out of the upper injection hole.

    Note: Commonly the actuator is installed on a slight angle. The lower injection port is defined as lowest port on the base plate.
    a. Press the filler compound into the lowest point.
    b. When clean filler compound without bubbles comes out of drain port b, close the drain ports.
    c. Continue until half of the last (top) drain is full, to allow flow back during the curing process

    Note: Recommend hose length is 500mm for the upper injection hose to allow flow back during the curing process.

Approved filler compounds
Chock Fast Orange PR610TCF
Steel Blue
Epocast 36
Locktite PC7202

11. After the filler compound has hardened, remove all four hoses and insert injection plugs.

MC_1133

CAUTION

After injection is complete. Remove all remaining compound containers from the vessel due to fire risk. (exotherm curing process)

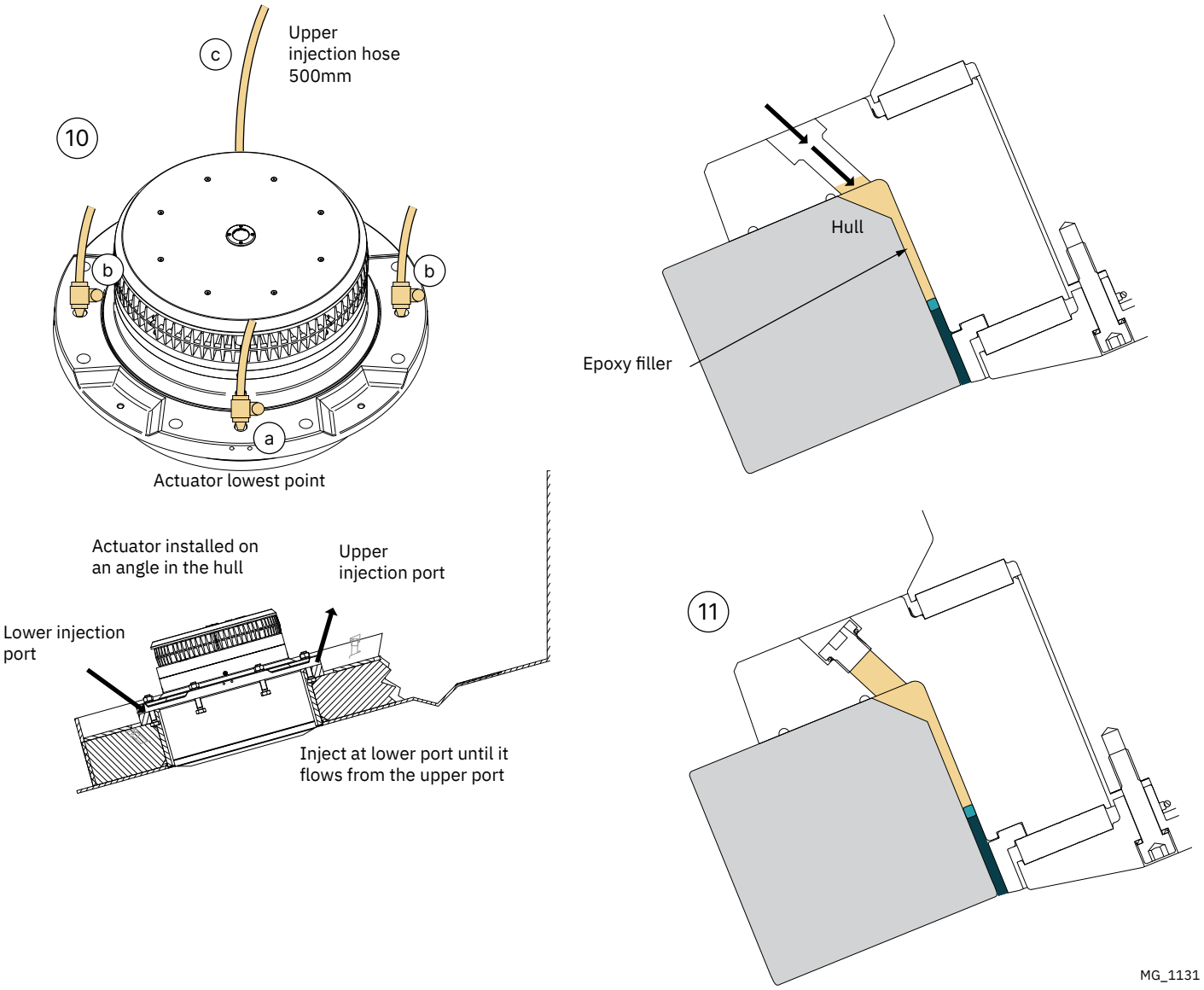

1. **Plan the installation** MC_0715
   The installation should be planned according to available cable length and placement recommendations for the different components. A system overview is shown in the Wiring Diagram chapter.

2. **Connect Actuator ground wire**
   Connect a ground wire from the vessel's main bonding/ anode system to each actuator. The wire must be connected to both the positions indicated.

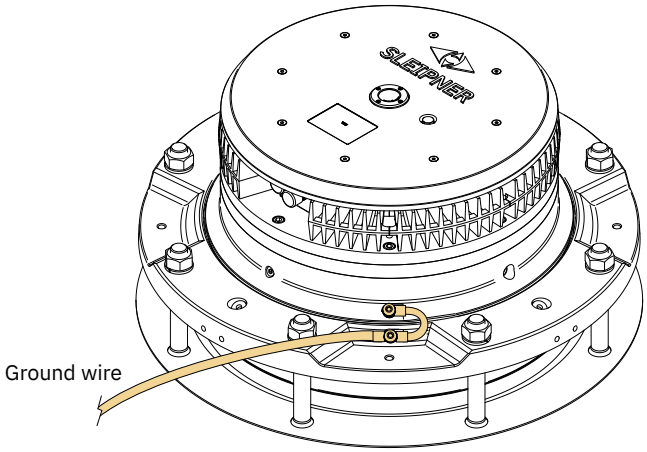

MG_0691

3. **Stabilizer Control Unit (SCU)**
   The motion sensor used by the stabilisation algorithm is located inside the SCU. It is important to mount the SCU to a stable surface perpendicular to the keel, preferably on a non-vibrating bulkhead and as central as possible in the boat. A typical location is the forward or aftward engine room bulkhead. During system configuration it is specified in the control panel if the SCU is mounted facing bow or stern. The SCU must be installed with the connectors facing down and clearance for cables bend radius. The cable to be used between the SCU and the actuator is available in several predefined lengths, with a maximum length of 30-meters. The location of the SCU must be selected so that it is in reach of the eFD or SPS40E actuator with one of the available cable lengths.

   Connect the supplied SCU Power Cable between connector X1 on SCU and a 24V DC supply protected with a 15A fuse. It is recommended to have a dedicated switch on the 24V supply to the SCU to enable a complete shut-down of the system.

   Connect an S-Link spur cable between connector X2 on SCU and a T-Connector on the S-Link back bone cable.

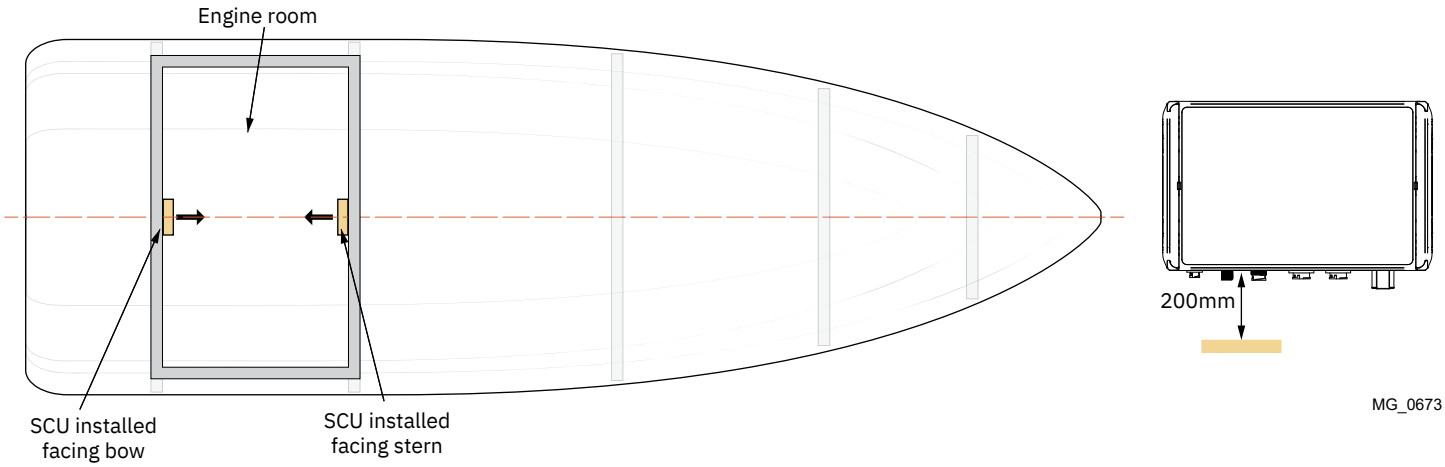

MG_0673

SCU cable installation

SCU cable

MC_0718

- Connect the actuator on starboard side to connector X5 on SCU and connect actuator on port side to connector X6 on SCU.
- Cables for connection of stabilizer system are available in the following standard lengths shown in the table:

Order number	151370-040	151370-070	151370-100	151370-150	151370-200	151370-250	151370-300
Cable Length	4m	7m	10m	15m	20m	25m	30m

SPS Electrionc Fin Drive (eFD)

The eFD is supplied with 2.5 / 4.5 meter long encoder- and power cables for connection to the actuator. Mount the eFD in proximity of the actuator to ensure that the cables can be connected.

Use four screws with a maximum diameter of 6mm and a maximum head diameter of 12mm to fasten the eFD. First fasten the screws for the top brackets, hook on the eFD and then fasten the screws for the bottom brackets. When the eFD is held in place by the top and bottom screws, tighten all screws to ensure the eFD is securely mounted.

MC_0716

The eFD should be mounted with the cables pointing down and clearance for air circulations, opening of the door and cable bend radius. See sketch below for required clearance.

Warning. High system voltage present.
Electrical installation must be performed by authorized personnel.

MG_0869

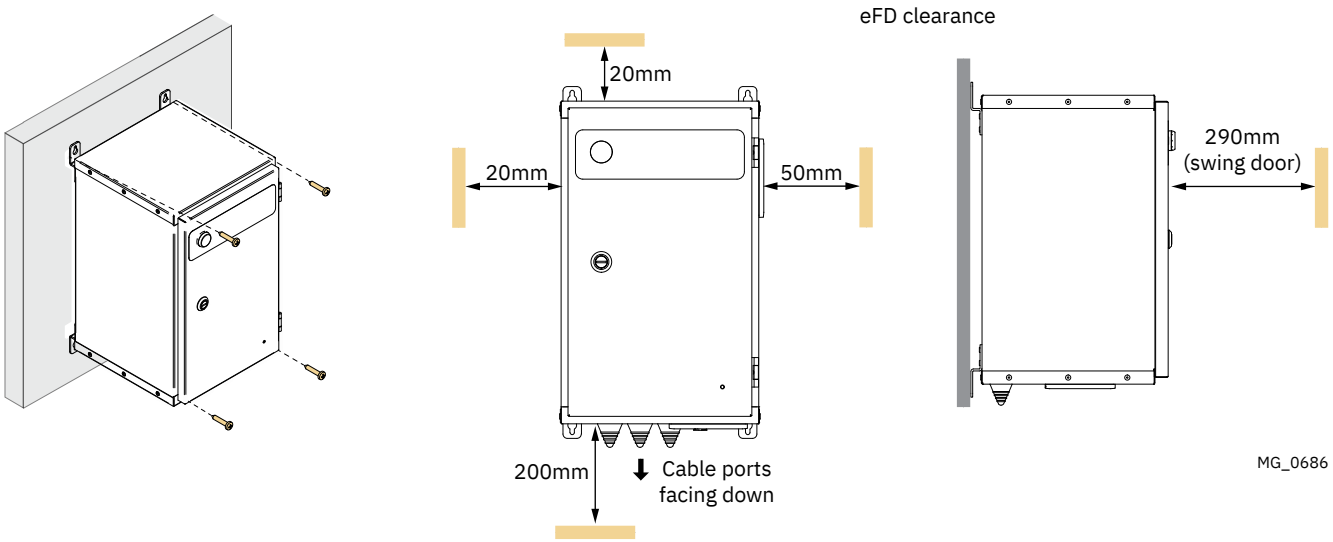

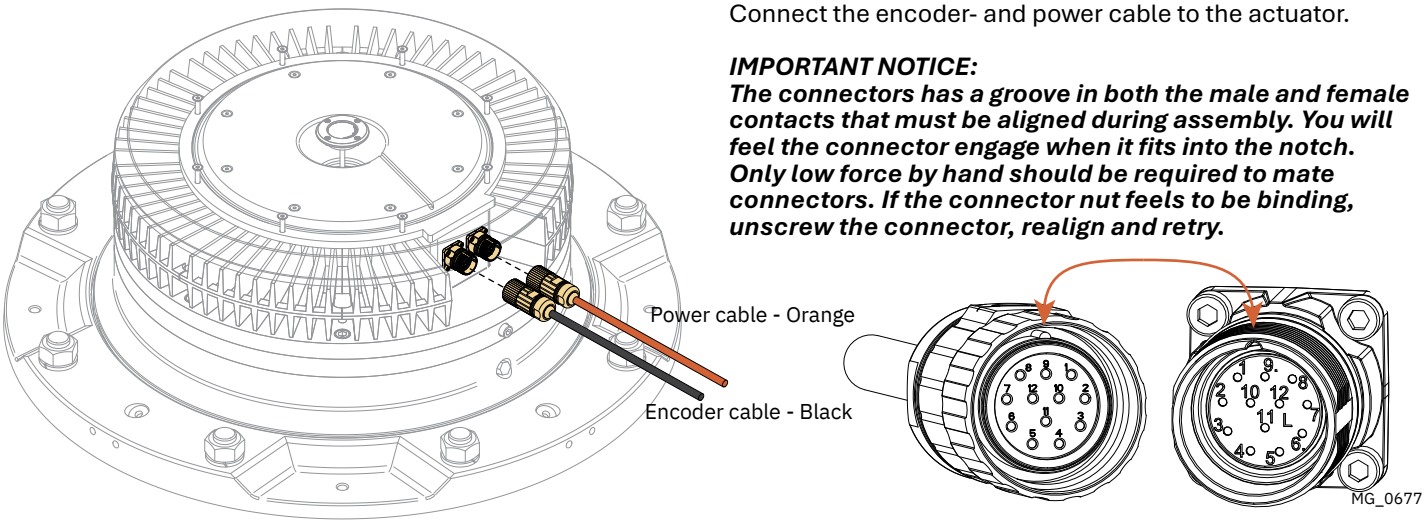

Connect the encoder- and power cable to the actuator.

IMPORTANT NOTICE:
The connectors has a groove in both the male and female contacts that must be aligned during assembly. You will feel the connector engage when it fits into the notch. Only low force by hand should be required to mate connectors. If the connector nut feels to be binding, unscrew the connector, realign and retry.

Each eFD should have a separate power supply cable with a dedicated fuse as shown in the Wire Diagram chapter. AC supply wire size and fuse rating should be chosen according to table below.

MC_0716

eFD	Supply Voltage nominal	Supply phases	Supply Current nominal	Peak Power	Recommended fuse rating	Recommended wire size
eFD60-230-1	220-240V 50/60Hz	1+N	16A	5.5kW	16A	2.5mm^2
eFD60-230-3	220-240V 50/60Hz	3	10A	5.5kW	10A	2.5mm^2
EFD70-230-1	220-240V 50/60Hz	1+N	25A	7,4kW	25A	6mm2
EFD70-400-3	380-440V 50/60Hz	3+N	16A	7,4kW	16A	2,5mm2
eFD80-230-3	220-240V 50/60Hz	3	25A	8.0kW	25A	4mm^2
eFD80-400-3	380-440V 50/60Hz	3+N	16A	8.0kW	16A	2.5mm^2
eFD100-230-3	220-240V 50/60Hz	3	10A	5.5kW	10A	2.5mm^2
eFD100-400-3	380-440V 50/60Hz	3+N	16A	14kW	25A	4mm^2
eFD110-400-3	380-440V 50/60Hz	3+N	16A	14kW	16A	2.5mm^2
sFD120-400-3	380-440V 50/60Hz	3+N	16A	14kW	16A	2.5mm^2

To get access to the power supply terminals of the eFD, open the lid by rotating the lock handle. Connect AC supply to the eFD according to instructions below.

230-1-K

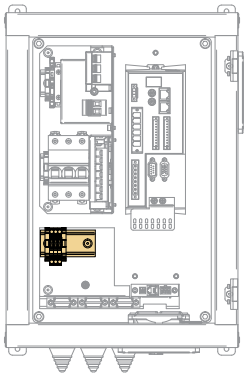

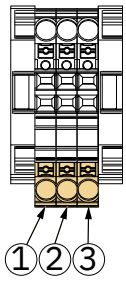

Terminal	Signal	Description
1	L	Line
2	N	Neutral
3	PE	Protective Earth

230-3-K

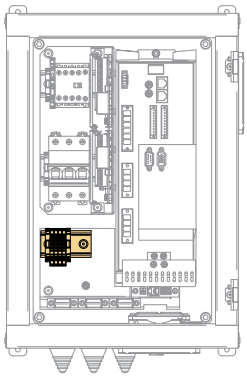

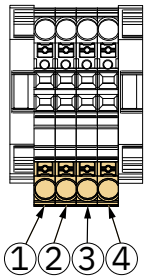

Terminal	Signal	Description
1	L1	Line 1
2	L2	Line 2
3	L3	Line 3
4	PE	Protective Earth

MG_0674

400-3-K

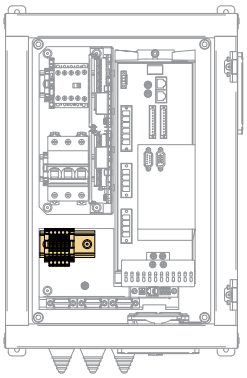

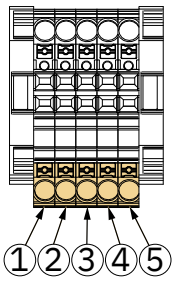

Terminal	Signal	Description
1	L1	Line 1
2	L2	Line 2
3	L3	Line 3
4	N	Neutral
5	PE	Protective Earth

The eFD units in the complete stabilizer system must be configured as port and starboard eFD.

This configuration is selected by the S2 switch on the driver module inside the eFD cabinet.
Use a small flat screwdriver to operate the switch, and turn it so that the small arrow on the switch points towards the correct position.

For 2 fin systems:

- Set S2 switch to position “1” for the starboard stabilizer
- Set S2 switch to position “2” for the port stabilizer.

For 4 fin systems:

- Set S2 switch to position “3” for the rear starboard stabilizer.
- Set S2 switch to position “4” for the rear port stabilizer

The S2 location is shown in the illustration below.

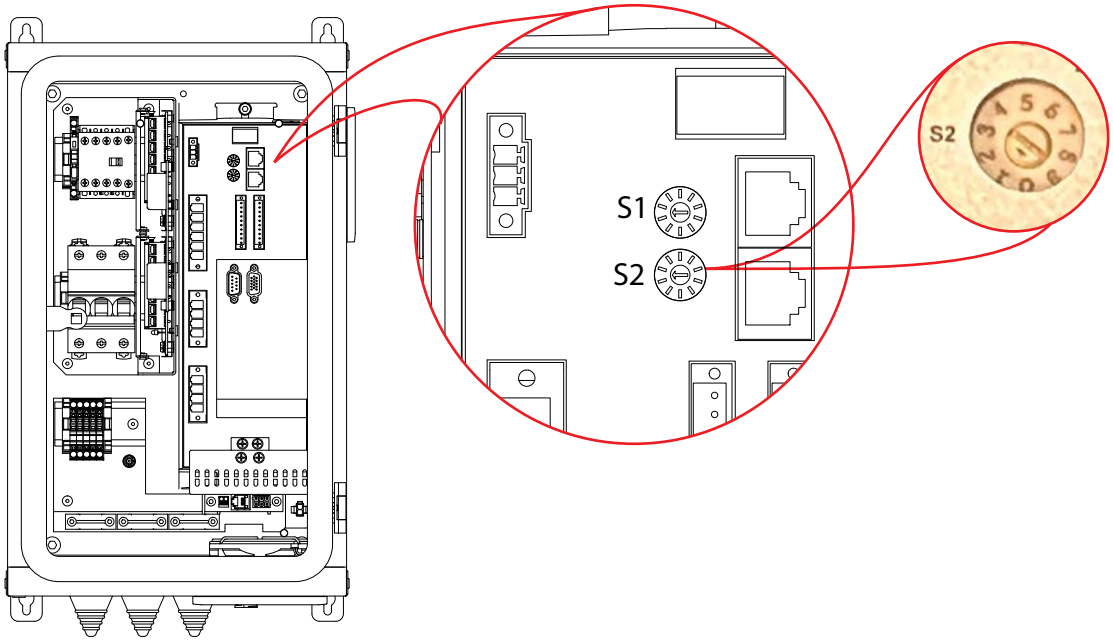

Control panel

Install the control panel (TP-43) according to instructions in the Installation Guide accompanying the control panel.

MC_0717

GPS receiver

SCU requires speed data from a GPS to operate the stabilizers. GPS signal must be interfaced through the S-Link Gateway (GW-1).

A GPS can be interfaced either through the NMEA 0183- or the NMEA 2000 port on GW-1.
See GW-1 user manual, document number 3057, for detailed information on connection of GPS and installation.

If using NMEA 2000 GPS input, ensure that signal is available at all times when stabilizer operation is required.

If using NMEA 0183 it is recommended to power the GPS from GW-1. If GPS is installed with dedicated power supply the GPS must always be powered when S-Link power is turned on.

Connect GW-1 to S-Link as shown in the Wiring Diagram chapter.

The GPS antenna should be installed where it can get a clear view of the sky and not be in the shadow of obstructions.

Reverse detection

To ensure proper operation and avoid damage the fins must be put in centre position when the vessel transmission is set in reverse for astern movement. The SCU offers three solutions for reverse detection. Ensure to select SCU-KIT order number according to desired reverse detection solution.

Revers Detection	SCU order number	Comment
NMEA 2000	SCU-KIT-2F-NMEA	GW-1 included for NMEA 2000 and GPS integration.
Pressure switches	SCU-KIT-2F-TD	Two pressure switches for Twin Disk transmission included. GW-1 included for GPS integration.
	SCU-KIT-2F-ZF	Two pressure switches for ZF transmission included. GW-1 included for GPS integration.
Reverse solenoid interface	SCU-KIT-2F-SO	Reversing Solenoid Interface included. GW-1 included for GPS integration.

NMEA 2000

If main engine transmission PGN127493 is available on NMEA 2000, this bus can be connected to GW-1 and the PGN made available for the SCU.

Pressure switches

For some types of gearboxes, pressure sensors can be installed on the main engine transmission. The drive direction can be monitored by detecting the pressure level in the gearbox control. Sensor port position can vary between different transmission models. Please contact gearbox supplier for instructions.

Both switches shall be connected in series and connect to connector X3 on SCU by using the supplied Reverse Detection Cable. An open switch is interpreted as transmission is put in reverse.

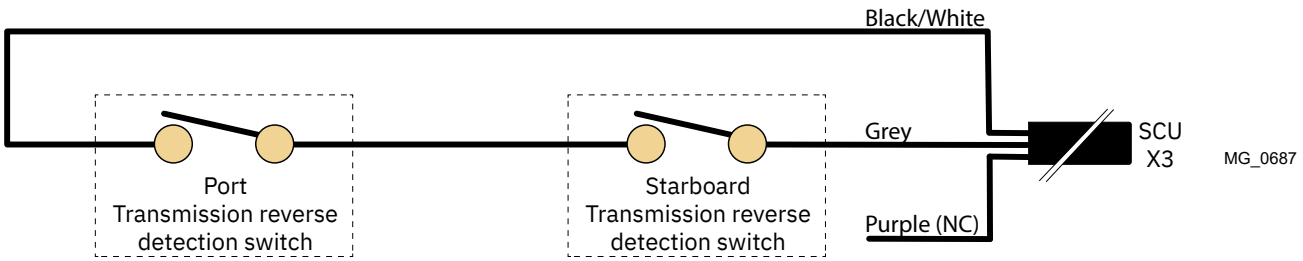

Reverse solenoid interface

For vessels not having available ports for pressure switches, connecting to 24V transmission solenoid signals could be an option. The solenoid signals must be connected to the Reversing Solenoid Interface box and the Reverse Detection Cable shall be connected between connector X3 on SCU and the Reversing Solenoid Interface box.

MC_0717

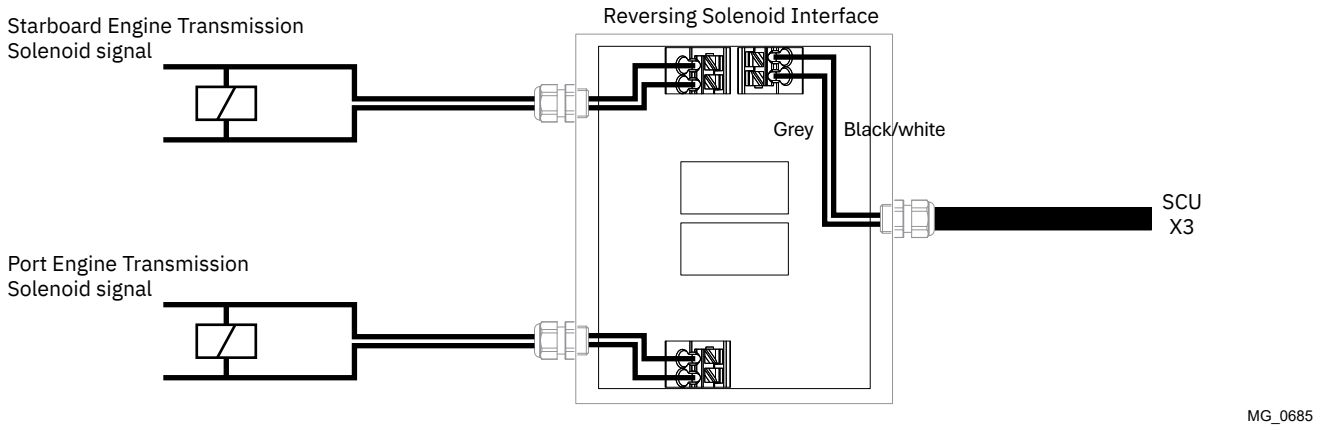

S-Link

See the S-Link System Description chapter for detailed information on the installation of the S-Link Power cable, END Terminator and additional S-Link components.

S-Link is a CAN-based control system used for communication between Sleipner products installed on a vessel. The system uses BACKBONE Cables as a common power and communication bus with separate SPUR Cables to each connected unit. Only one S-Link POWER cable shall be connected to the BACKBONE Cable. Units with low power consumption are powered directly from the S-Link bus.

Main advantages of S-Link system:

- Compact and waterproof plugs.
- BACKBONE and SPUR Cables have different colour coding and keying to ensure correct and easy installation. BACKBONE Cables have blue connectors and SPUR Cables have green connectors.
- Different cable lengths and BACKBONE Extenders make the system scalable and flexible to install.

Installation of S-Link cables:

Select appropriate cables to keep the length of BACKBONE- and SPUR Cables to a minimum. In case of planned installation with total BACKBONE Cable length exceeding 100 meters please consult your local distributor. The S-Link cables should be properly fastened when installed to avoid sharp bend radius, cable chafing and undesired strain on connectors. Locking mechanism on connectors must be fully closed. To ensure long lifetime, cables, T-Connectors and Extenders should not be located so that they are permanently immersed in water or other fluids. It is recommended to install cables in such a way that water and condensation do not flow along the cables into the connectors. This can be done for example by introducing a u-shape bend before the cable enters the product connector.

Ideally, the POWER Cable should be connected to the middle of the BACKBONE bus to ensure an equal voltage drop at both ends of the BACKBONE Cable. The yellow and black wire in the POWER Cable shall be connected to GND and the red wire connected to +12VDC or +24VDC.

To reduce the risk of interference, avoid routing the S-Link cables close to equipment such as radio transmitters, antennas or high voltage cables. The backbone must be terminated at each end with the END Terminator.

SPUR cables can be left unterminated to prepare for the installation of future additional equipment. In such cases, ensure to protect open connectors from water and moisture to avoid corrosion in the connectors.

MC_0120

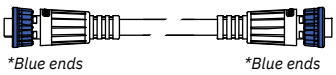

BACKBONE Cable
Forms the communication and power bus throughout a vessel. Available in different standard lengths.

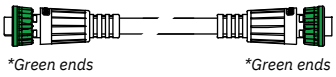

SPUR Cable
Used to connect S-Link compliant products to the backbone cable. One SPUR Cable must be used for each connected component, with no exceptions. Recommended to be as short as practically possible. Available in different standard lengths.

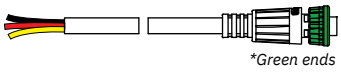

POWER Cable
Required in all installations for connection of BACKBONE Cable to a power supply and should be protected with a 2A fuse.

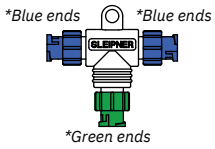

T-Connector
Used for connection of SPUR or POWER Cable to the BACKBONE Cable. One T-Connector for each connected cable.

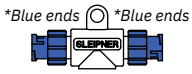

BACKBONE Extender
Connects two BACKBONE Cables to extend the length.

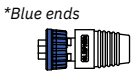

END Terminator
Must be one at each end of the BACKBONE bus.

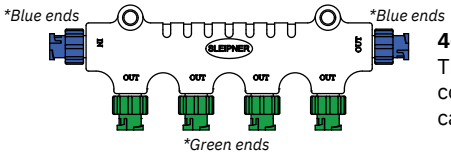

4-Port T-Connector
The 4-PORT T-connector allows multiple SPUR Cables to be connected. The 4-PORT T-connector comes with two sealing caps to protect unused ports.

S-Link installation example

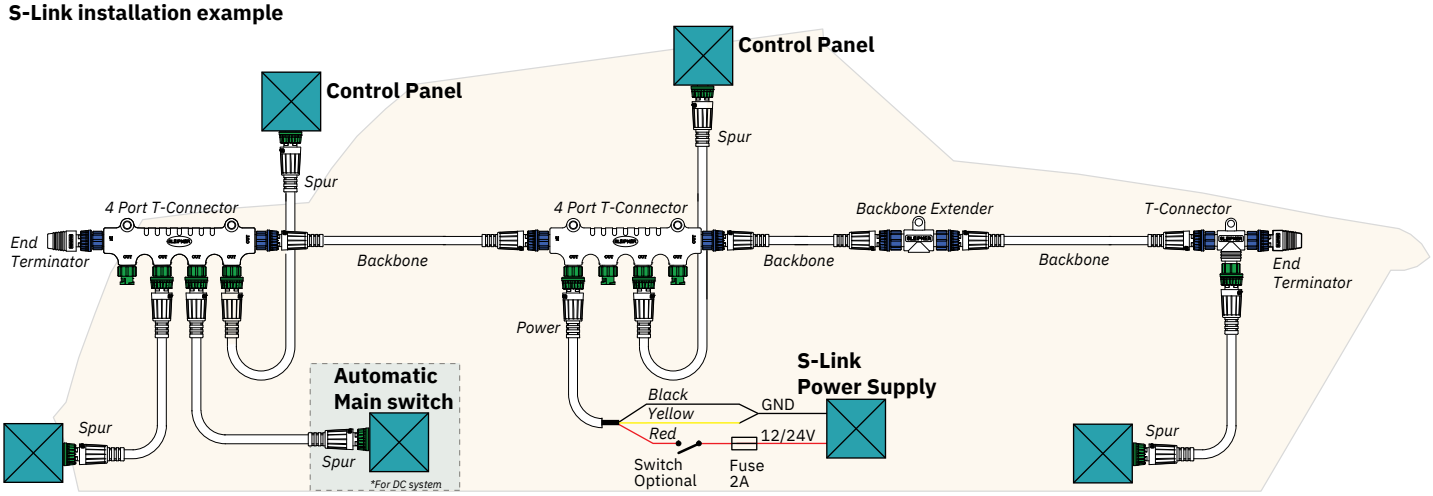

MG_0159

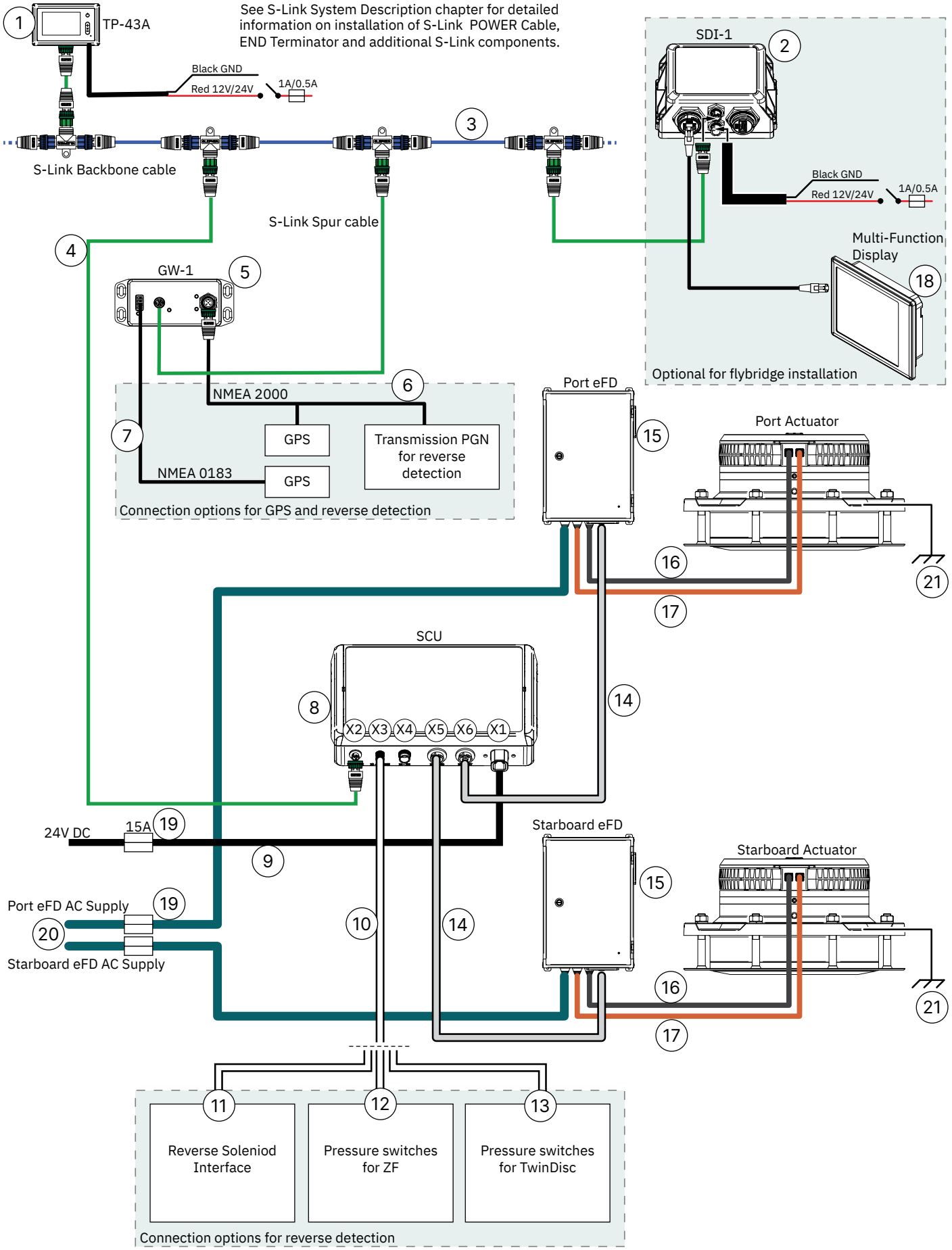
1
TP-43A
See S-Link System Description chapter for detailed information on installation of S-Link POWER Cable, END Terminator and additional S-Link components.
Black GND
Red 12V/24V
1A/0.5A
3
S-Link Backbone cable
S-Link Spur cable
SDI-1
2
Black GND
Red 12V/24V
1A/0.5A
Multi-Function Display
18
Optional for flybridge installation
4
GW-1
5
6
NMEA 2000
7
GPS
Transmission PGN for reverse detection
NMEA 0183
GPS
Connection options for GPS and reverse detection
Port eFD
15
Port Actuator
16
21
17
SCU
8
14
X2
X3
X4
X5
X6
X1
24V DC
15A
19
9
Starboard eFD
15
Starboard Actuator
Port eFD AC Supply
19
20
Starboard eFD AC Supply
10
14
16
21
17
11
12
13
Reverse Solenoid Interface
Pressure switches for ZF
Pressure switches for TwinDisc
Connection options for reverse detection
MG_0655

Reference Number	Item Number	Description
1	TP-43A	**Stabilizer control panel.** Included in all SCU-kits
2	SDI-1	**S-Link Display Interface.** Optional. Can be used for monitoring and configuration of thrusters and stabilizer
3	S-Link Backbone cable	**Available in different lengths**
	6 1320-0,2M	S-Link™ backbone control cable 0,2m
	6 1320-2M	S-Link™ backbone control cable 2m
	6 1320-4M	S-Link™ backbone control cable 4m
	6 1320-7M	S-Link™ backbone control cable 7m
	6 1320-10M	S-Link™ backbone control cable 10m
	6 1320-15M	S-Link™ backbone control cable 15m
	6 1320-20M	S-Link™ backbone control cable 20m
4	S-Link Spur cable	**Available in different lengths**
	6 1321-0,4M	S-Link™ spur control cable 0,4m
	6 1321-1M	S-Link™ spur control cable 1m
	6 1321-3M	S-Link™ spur control cable 3m
	6 1321-5M	S-Link™ spur control cable 5m
	S-Link	Other available S-Link components
	6 1328	S-Link™ spur power cable 2,5m
	6 1322	S-Link™ backbone extender
	6 1326	S-Link™ T-connector
	6 1403	S-Link™ 4-Port T-connector
	6 1327	S-Link™ terminator
5	GW-1	**S-Link™ gateway** Included in all SCU-kits
6	NMEA 2000 Network	**Not supplied by Sleipner** Used for GPS connection and/or reverse detection by NMEA engine control.

Reference Number	Item Number	Description
7	321714	**GPS-receiver for S-Link™ Gateway** NMEA 0183 GPS for speed data to Stabilizer system, cable 9m.
8	SCU-12	**DMC SCU 2-fin** Included in all SCU-kits
9	151371-025	**SCU Power Cable 2.5m** Included in all SCU-kits
10	151375-100	**SCU Reverse Detection Cable 10m** Included in SCU-KIT-2F-SO, SCU-KIT-2F-ZF and SCU-KIT-2F-TD
11	151380	**Reversing Solenoid Interface w/dual relays** Included in SCU-KIT-2F-SO
12	321270	**Pressure switch 1/4" 0.1-1 bar NC** Included in SCU-KIT-2F-ZF
13	321272	**Pressure switch 1/4" 1-10 bar NC** Included in SCU-KIT-2F-TD
14	SCU cable	**Available in different lengths** Different length on port and starboard side can be used.
	151370-040	SCU-FCU cable 4m
	151370-070	SCU-FCU cable 7m
	151370-100	SCU-FCU cable 10m
	151370-150	SCU-FCU cable 15m
	151370-200	SCU-FCU cable 20m
	151370-250	SCU-FCU cable 25m
	151370-300	SCU-FCU cable 30m
15	EFD-XX-400-3-K	**SPS Electric Fin Drive** 400VAC 3 phase. One for port and one for starboard actuator.
16	Encoder cable	**Encoder cable 2.5m** Connected to eFD by Sleipner.
17	Power cable	**Actuator power cable 2.5m** Connected to eFD by Sleipner
18	Multi-Functional Displays	**Not supplied by Sleipner** Optional. MFDs can be used for monitoring and configuration of thruster and stabilizer systems when connected to SDI-1. TP-43A is always required.
19	Fuse	**Not supplied by Sleipner** Fuses for SCU and eFD power cables, ref table on page 36
20	eFD power cable	**Not supplied by Sleipner** For voltage supply to eFD.
21	Ground wire	**Not supplied by Sleipner** For connection between vessel's main bonding system and actuator.

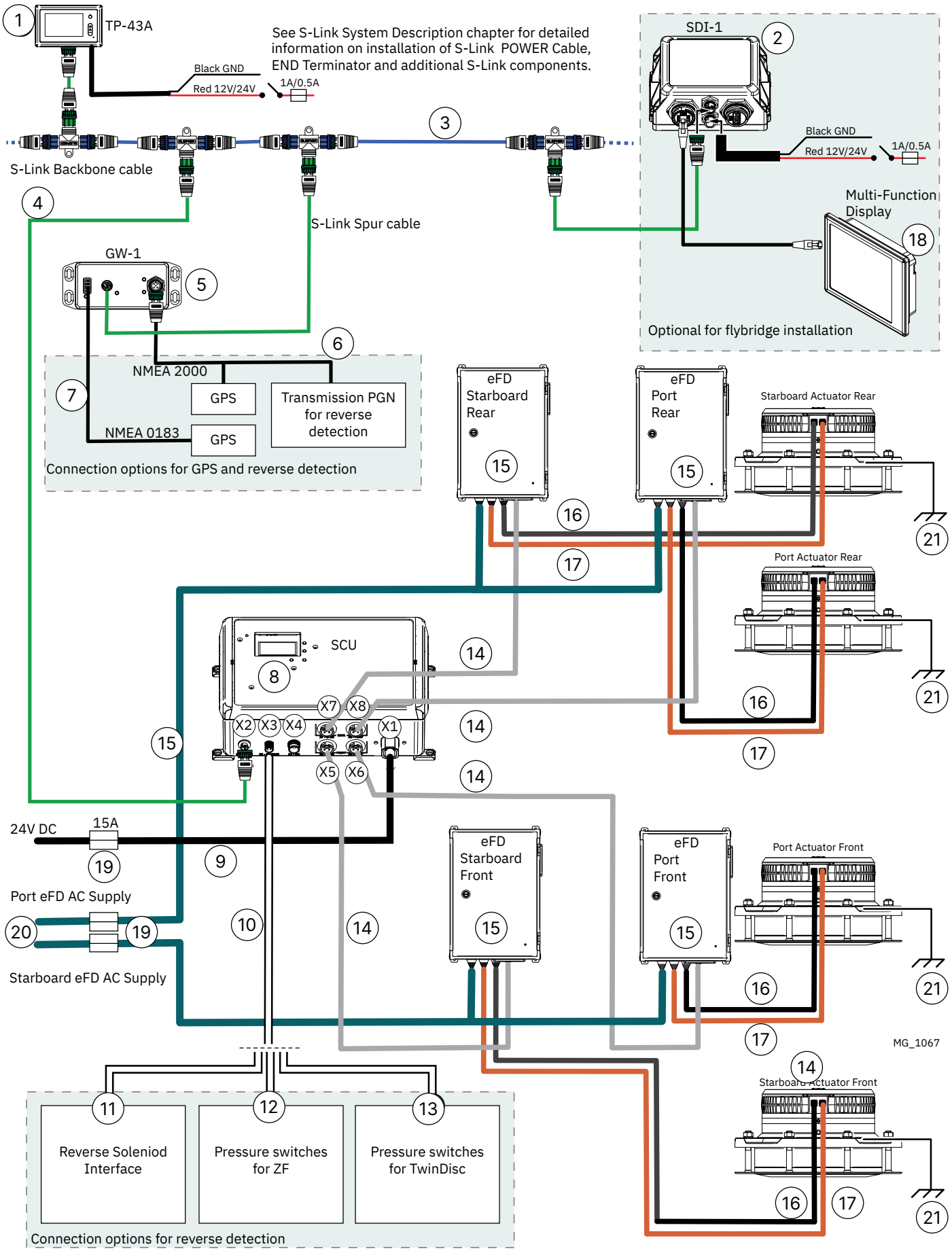
1
TP-43A
See S-Link System Description chapter for detailed information on installation of S-Link POWER Cable, END Terminator and additional S-Link components.
Black GND
Red 12V/24V
1A/0.5A
3
S-Link Backbone cable
4
S-Link Spur cable
SDI-1
2
Black GND
Red 12V/24V
1A/0.5A
Multi-Function Display
18
Optional for flybridge installation
GW-1
5
6
NMEA 2000
7
GPS
Transmission PGN for reverse detection
NMEA 0183
GPS
Connection options for GPS and reverse detection
eFD Starboard Rear
15
eFD Port Rear
15
Starboard Actuator Rear
16
17
21
Port Actuator Rear
SCU
8
14
X7
X8
X2
X3
X4
X1
X5
X6
15
24V DC
15A
19
9
Port eFD AC Supply
20
19
10
14
Starboard eFD AC Supply
eFD Starboard Front
15
eFD Port Front
15
Port Actuator Front
16
21
17
MG_1067
14
Starboard Actuator Front
11
12
13
Reverse Solenoid Interface
Pressure switches for ZF
Pressure switches for TwinDisc
Connection options for reverse detection

Reference Number	Item Number	Description
1	TP-43A	**Stabilizer control panel.** Included in all SCU-kits
2	SDI-1	**S-Link Display Interface.** Optional. Can be used for monitoring and configuration of thrusters and stabilizer
3	S-Link Backbone cable	**Available in different lengths**
	6 1320-0,2M	S-Link™ backbone control cable 0,2m
	6 1320-2M	S-Link™ backbone control cable 2m
	6 1320-4M	S-Link™ backbone control cable 4m
	6 1320-7M	S-Link™ backbone control cable 7m
	6 1320-10M	S-Link™ backbone control cable 10m
	6 1320-15M	S-Link™ backbone control cable 15m
	6 1320-20M	S-Link™ backbone control cable 20m
4	S-Link Spur cable	**Available in different lengths**
	6 1321-0,4M	S-Link™ spur control cable 0,4m
	6 1321-1M	S-Link™ spur control cable 1m
	6 1321-3M	S-Link™ spur control cable 3m
	6 1321-5M	S-Link™ spur control cable 5m
	S-Link	Other available S-Link components
	6 1328	S-Link™ spur power cable 2,5m
	6 1322	S-Link™ backbone extender
	6 1326	S-Link™ T-connector
	6 1403	S-Link™ 4-Port T-connector
	6 1327	S-Link™ terminator
5	GW-1	**S-Link™ gateway** Included in all SCU-kits
6	NMEA 2000 Network	**Not supplied by Sleipner** Used for GPS connection and/or reverse detection by NMEA engine control.

Reference Number	Item Number	Description
7	321714	**GPS-receiver for S-Link™ Gateway** NMEA 0183 GPS for speed data to Stabilizer system, cable 9m.
8	SCU-14	**DMC SCU 2-fin** Included in all SCU-kits
9	151371-025	**SCU Power Cable 2.5m** Included in all SCU-kits
10	151375-100	**SCU Reverse Detection Cable 10m** Included in SCU-KIT-2F-SO, SCU-KIT-2F-ZF and SCU-KIT-2F-TD
11	151380	**Reversing Solenoid Interface w/dual relays** Included in SCU-KIT-2F-SO
12	321270	**Pressure switch 1/4" 0.1-1 bar NC** Included in SCU-KIT-2F-ZF
13	321272	**Pressure switch 1/4" 1-10 bar NC** Included in SCU-KIT-2F-TD
14	SCU cable	**Available in different lengths** Different length on port and starboard side can be used.
	151370-040	SCU-FCU cable 4m
	151370-070	SCU-FCU cable 7m
	151370-100	SCU-FCU cable 10m
	151370-150	SCU-FCU cable 15m
	151370-200	SCU-FCU cable 20m
	151370-250	SCU-FCU cable 25m
	151370-300	SCU-FCU cable 30m
15	EFD-XX-400-3-K	**SPS Electric Fin Drive** 400VAC 3 phase. One for port and one for starboard actuator.
16	Encoder cable	**Encoder cable 2.5m** Connected to eFD by Sleipner.
17	Power cable	**Actuator power cable 2.5m** Connected to eFD by Sleipner
18	Multi-Functional Displays	**Not supplied by Sleipner** Optional. MFDs can be used for monitoring and configuration of thruster and stabilizer systems when connected to SDI-1. TP-43A is always required.
19	Fuse	**Not supplied by Sleipner** Fuses for SCU and eFD power cables, ref table on page 36
20	eFD power cable	**Not supplied by Sleipner** For voltage supply to eFD.
21	Ground wire	**Not supplied by Sleipner** For connection between vessel's main bonding system and actuator.

Note:*The keel alignment tool is not a part of the standard delivery, and can be purchased from Sleipner. Part numbers are listed in the table below.*
Alternatively, any custom-made device that serves the same purpose may also be used.

Use of the alignment tool:

1. Clamp a straightedge ruler to the bracket. The recommended distance "L" is depended of the actuator type, see the table below.

Actuator type	SPS40E	SPS50E	SPS60E	SPS70E	SPS80E	SPS100E
Distance "L"	600 mm	800 mm	800 mm	1200 mm	1200 mm	1500 mm
Tool part no.	SM200125	SM200179	SM196426	SM200188	SM200276	SM200328

Before performing the keel alignment procedure, assemble the alignment tool to the actuator:

2. Align the bracket with the bump on the actuator fin hub.
3. Enter the screws in the corresponding holes on the actuator hub and tighten.

When the bracket with the straightedge ruler is assembled to the actuator, the actuator centerpoint will be at the indicated position "C".
Perform the Keel alignment procedure as described on the following page.
Verify that the straight ruler on the alignment tool is paralell to the keel by ensuring that the distance from both A and B to the keel center is approximately equal to the distance between the actuator centerpoint "C" and the keel center.

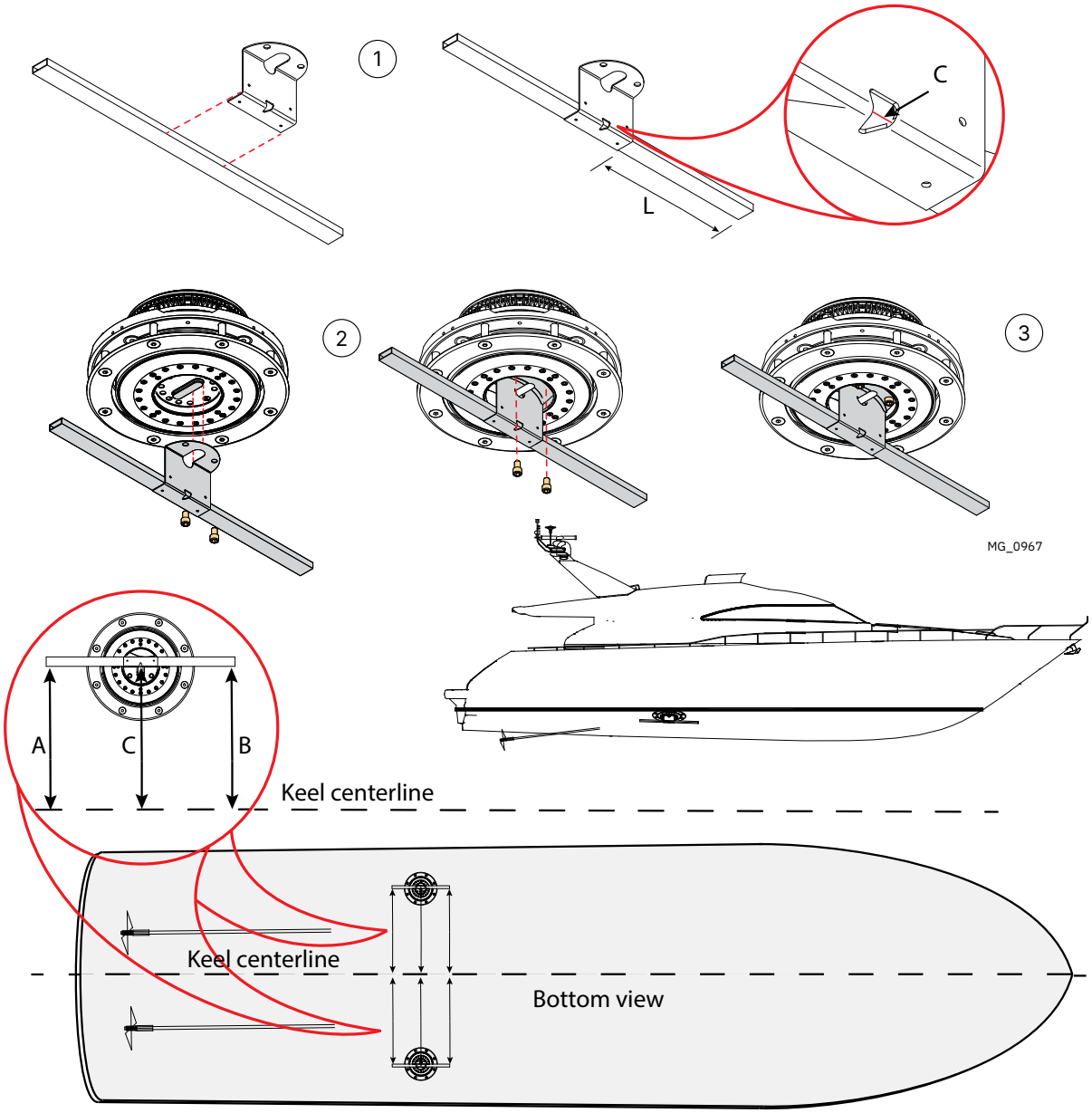

CAUTION

Keep clear of the alignment tool during startup of the system. It may rotate, and a possible danger of personal injuries.

Preparations

The keel alignment procedure must be carried out with the wessel on shore, before the fins are mounted. This is a one-time procedure. Do not repeat unless an actuator encoder has been replaced.
If the vessel is our of water and fin is installed, the procedure will fail.
Verify that the installation is performed correctly before performing the setup procedure.

- Verify that the complete stabilizer system with all its components are correctly installed and wired.
- Install the fin alignment tool to the actuator according to the “Keel alignment tool setup” procedure.
- Turn the complete system ON. (S-link, TP43, SCU)
- “Wake up” the TP-43 panel if it is dark by touching the ON/OFF button.
- Select the “Configuration” menu.

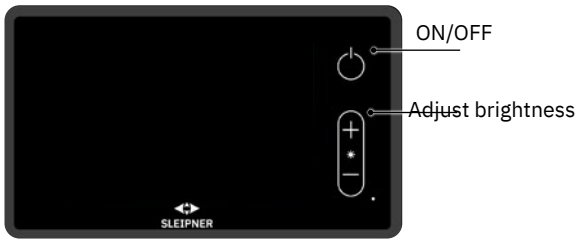

Keel alignment setup procedure

1. From the main menu, select Stabilizers
2. Enter the PIN code. (1234 is standard)
3. Select Setup
4. Select Fin installation
5. Select Port or Starboard
6. Select “Edit” and select the correct actuator and fin type from the dropdown menu.
7. Select Start.
8. Select “Start motor self tuning”, and wait until the process is completed.
- Measure the distance perpendicular from the keel to each end of the alignment tool.
9. Press the arrow buttons to adjust the actuator alignment tool paralell with the keel.
10. Press the Confirm keel center button when ready.

Repeat the procedure for the port fin.
When completed, return to fin installation procedure

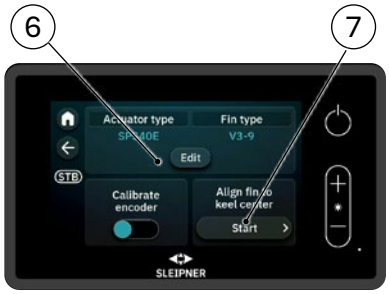

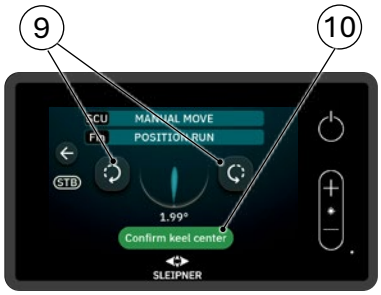

When applying antifouling to the hull, the antifouling must also be applied to the actuator surfaces.
Consult an antifouling supplier for correct product and procedure for protecting the 316 steel plate and hull material from marine growth.
However, it is of ***critical importance*** that three specific areas remain unpainted. These areas must be carefully masked during the painting process to ensure they are not exposed to paint. As illustrated below, the areas to be masked are those that form openings into the actuator, and also the fin installation surface. Ensuring these surfaces are free from paint is essential for proper functionality.

- Section of the hull, (Grey areas). (**Reference 1**).
- Areas on the actuator that must be applied with antifouluing. (Yellow areas). (**Reference 2**).
- Areas of the actuator that must NOT be applied with antifouling. Must be masked during applying of antifouling . (Orange areas). (**Reference 3**).

MC_1071

Detail of the areas that must NOT be applied with antifouling. (Detailed illustration of Reference 3)
The areas that forms openings into the actuator (**Reference 4**), and the fin installation surface (**Reference 5**).

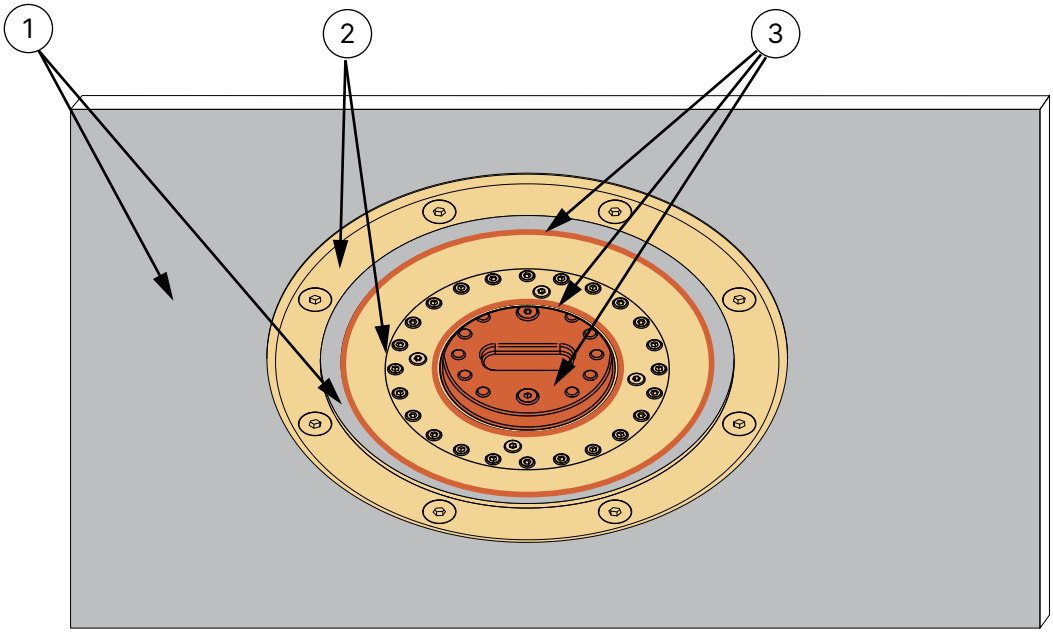

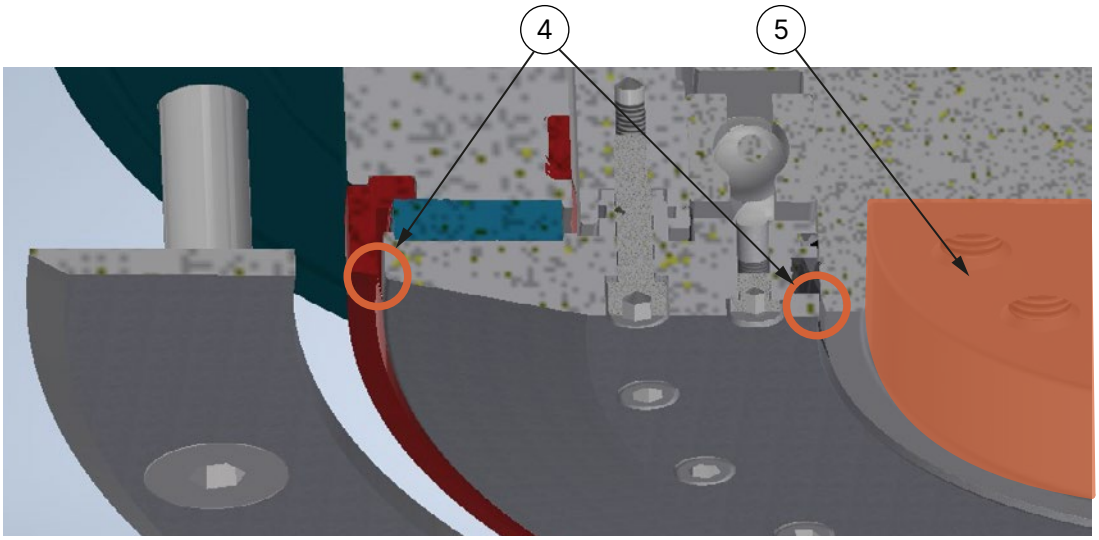

MG_1073

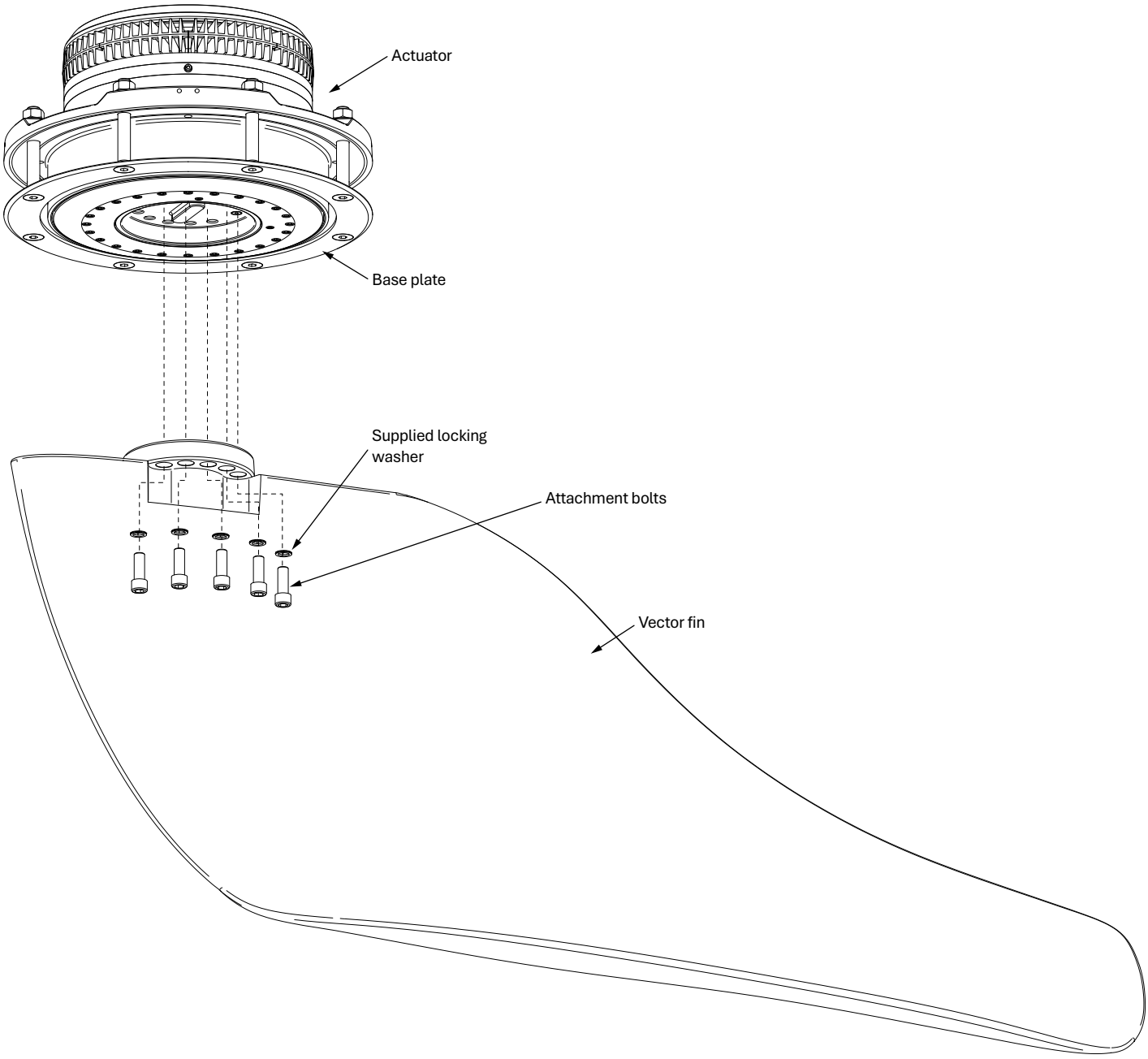
Actuator
Base plate
Supplied locking washer
Attachment bolts
Vector fin

MG_0688

1. Align tongue and groove on the fin and the fin hub.
   Note: Do not apply grease to the bolt holes or the surface plate of the fin.

2. Place the locking washer to each bolt and apply a small amount of lubricant to the bolt threads. Insert the 10 attachment bolts to the fin.

3. Lift the fin into position.

CAUTION

Ensure appropriate support straps as to not damage the fin.

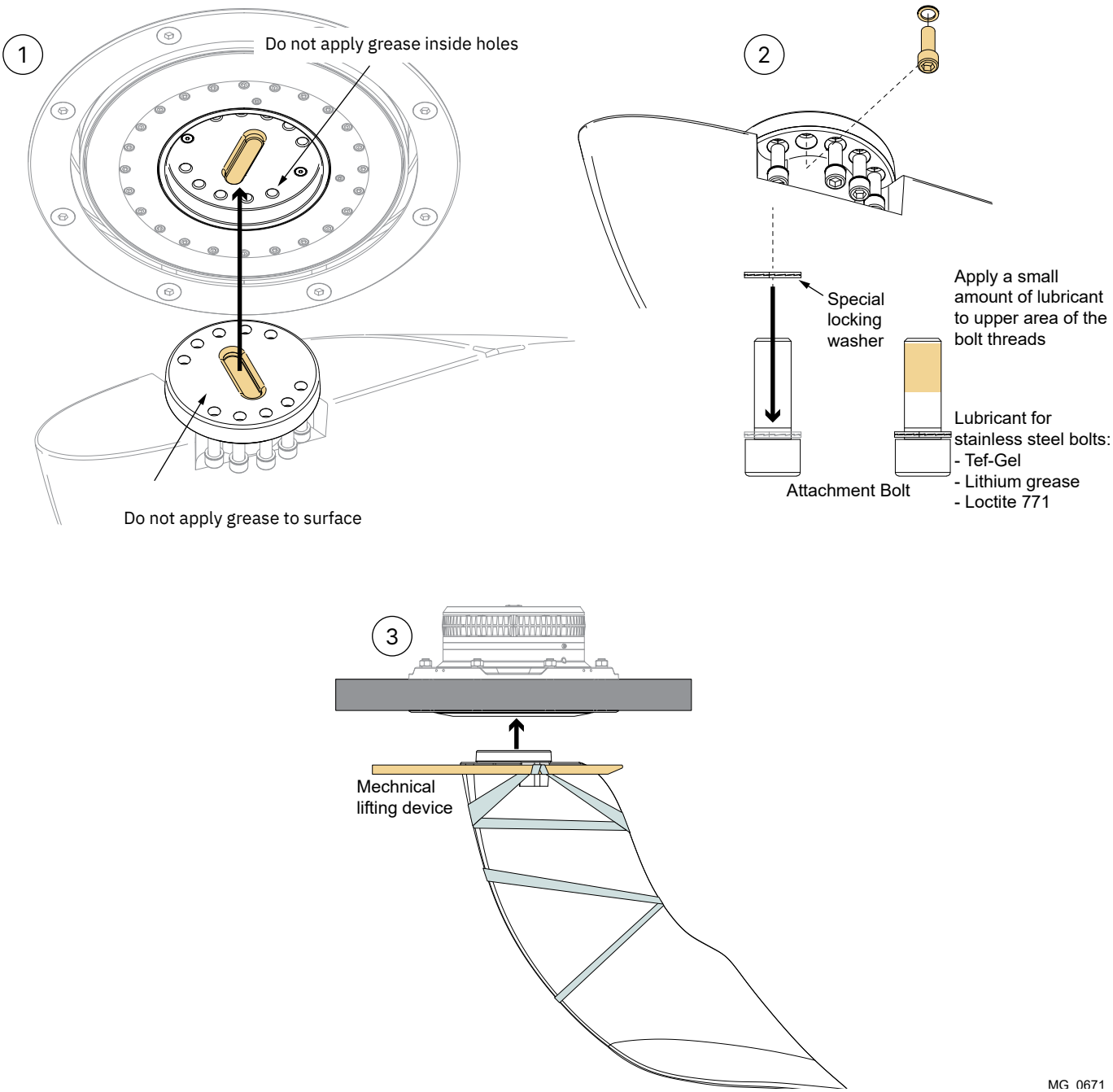

4. Tighten & torque load the 10 attachment bolts in two stages following the defined number order.
   Stage 1: Fasten each bolt to the defined tightening value and order.
   Stage 2: Fasten each bolt to the defined tightening value and order.

MC_0654

Tighten	SPS60E	SPS70E	SPS80E	SPS90E	SPS100/110E	SPS120E
Stage 1	30Nm	30Nm	30Nm	30Nm	30Nm	30Nm
Stage2	155Nm	155Nm	300Nm	300Nm	300Nm	300Nm

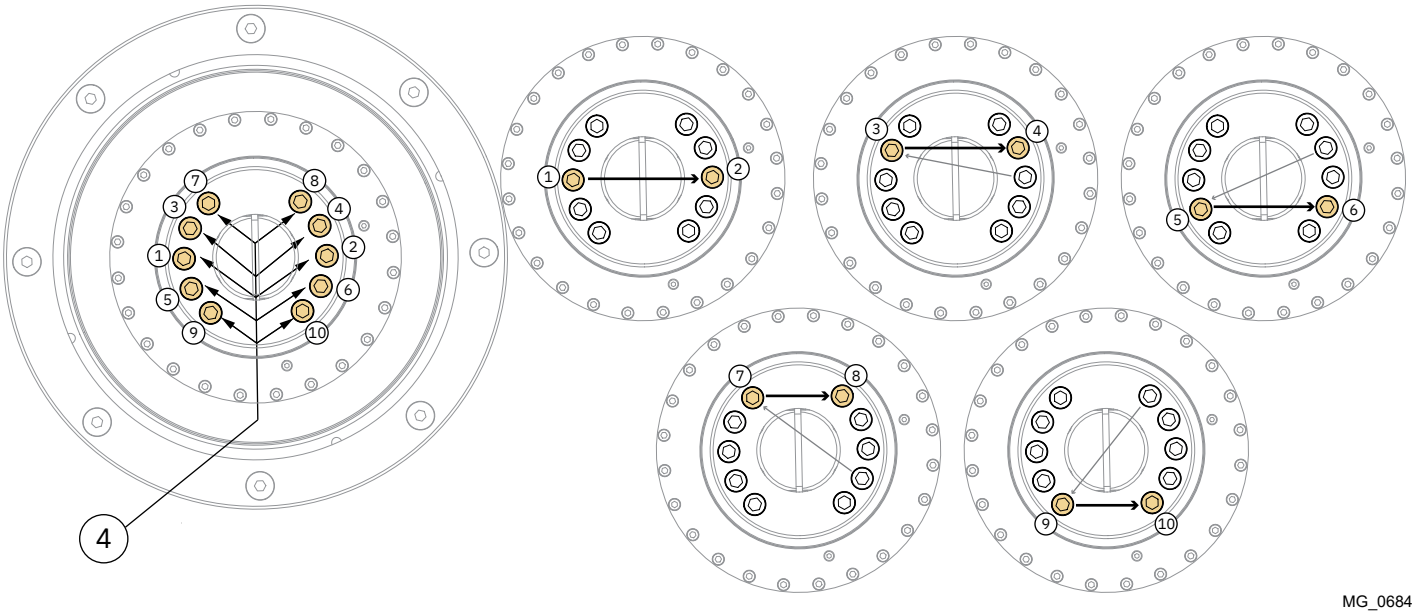

MG_0684

1. Apply threadlock, e.g Loctire 243, on the setscrews, enter them in to the countersunk screwheads, and screw them all the way in.
2. Place the shaft cover in the fin, and enter the premounted screwheads.
   Note: The two shaft covers are not equal, they only fit in one of the sides each.
3. Place the other cover in the opposite side of the fin. Apply threadlock on the setscrew, and enter the screwheads on the setscrews. Screw them all the way in, and tighten.

MC_0970

1

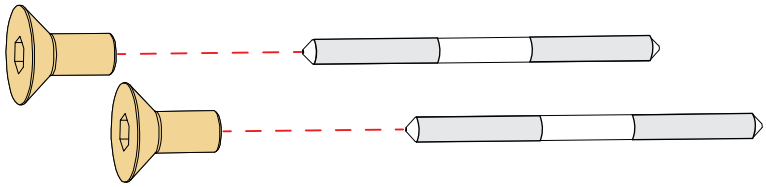

2

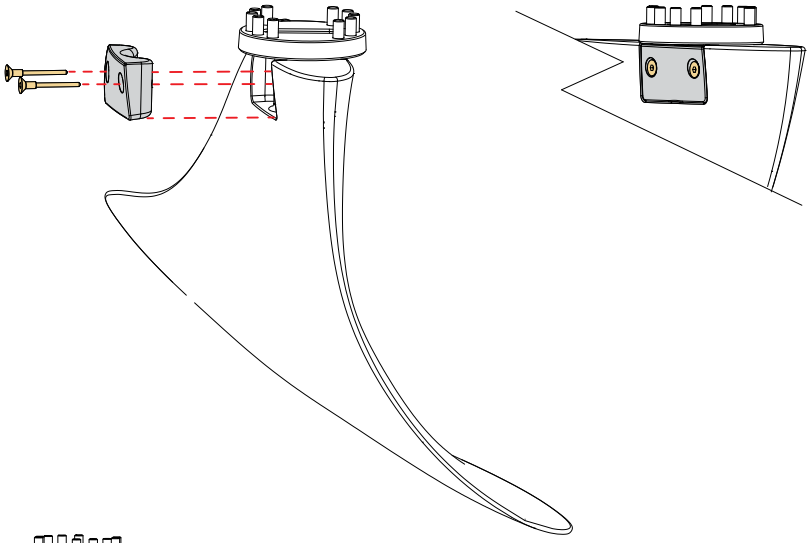

3

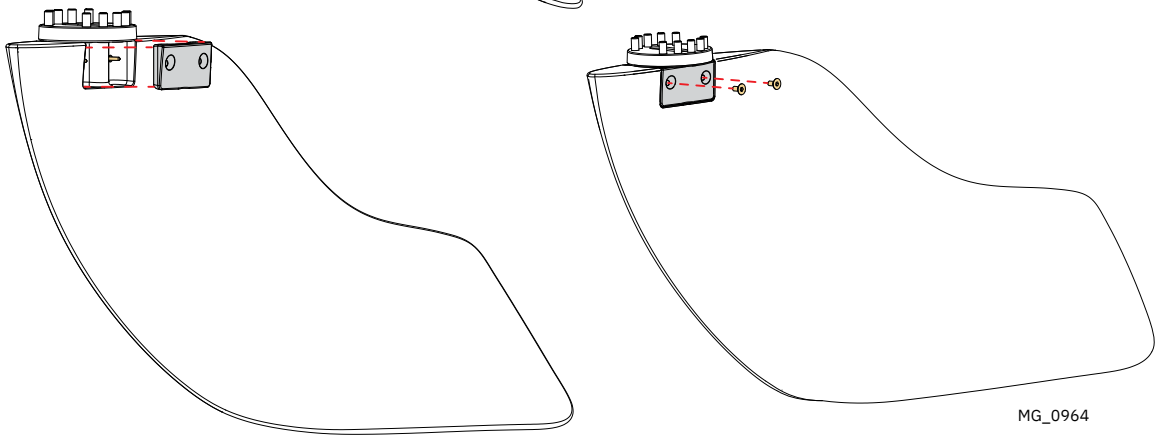

MG_0964

Purpose
The purpose with this set up is to calibrate the vessels horizontal position in to the stabilizer system. This is important for the system to operate
correctly.
The zero inclitantion procedure can be performed at any time, either on shore or at sea, but before the Sea trial procedure.

Preparation
Ensure that the vessel is in horizontal position in the sideways direction. If not possible, jump to the “Manual calibration” section.

Automatic calibration:
1. From the main menu, select the “Configuration” menu.
2. Select the “Stabilizers” menu.
3. Enter the PIN code. (1234 is standard). Confirm with ✓.
4. Select Setup
5. Select “Zero inclination”
6. Select “Start zero inclination”.
- Status will show when completed.

Manual calibration:
- Verify the vessels deviation from the horizontal sideways position.
- Perform the steps 1 to 5 in the Automatic calibration procedure above.

7. Select “Zero inclination offset”.
   - Vessel heeling to the port side - enter a positive value. Vessel heeling to the starboard side - enter a negative value
8. Enter the roll angle offset value in the numeric keyboard that shows up.
9. Press ✓ in the numeric keyboard.
10. Verify that the value shown in the stabilizer view corresponds with the vessel heeling.
11. Enter “Confirm keel .

MC_0905

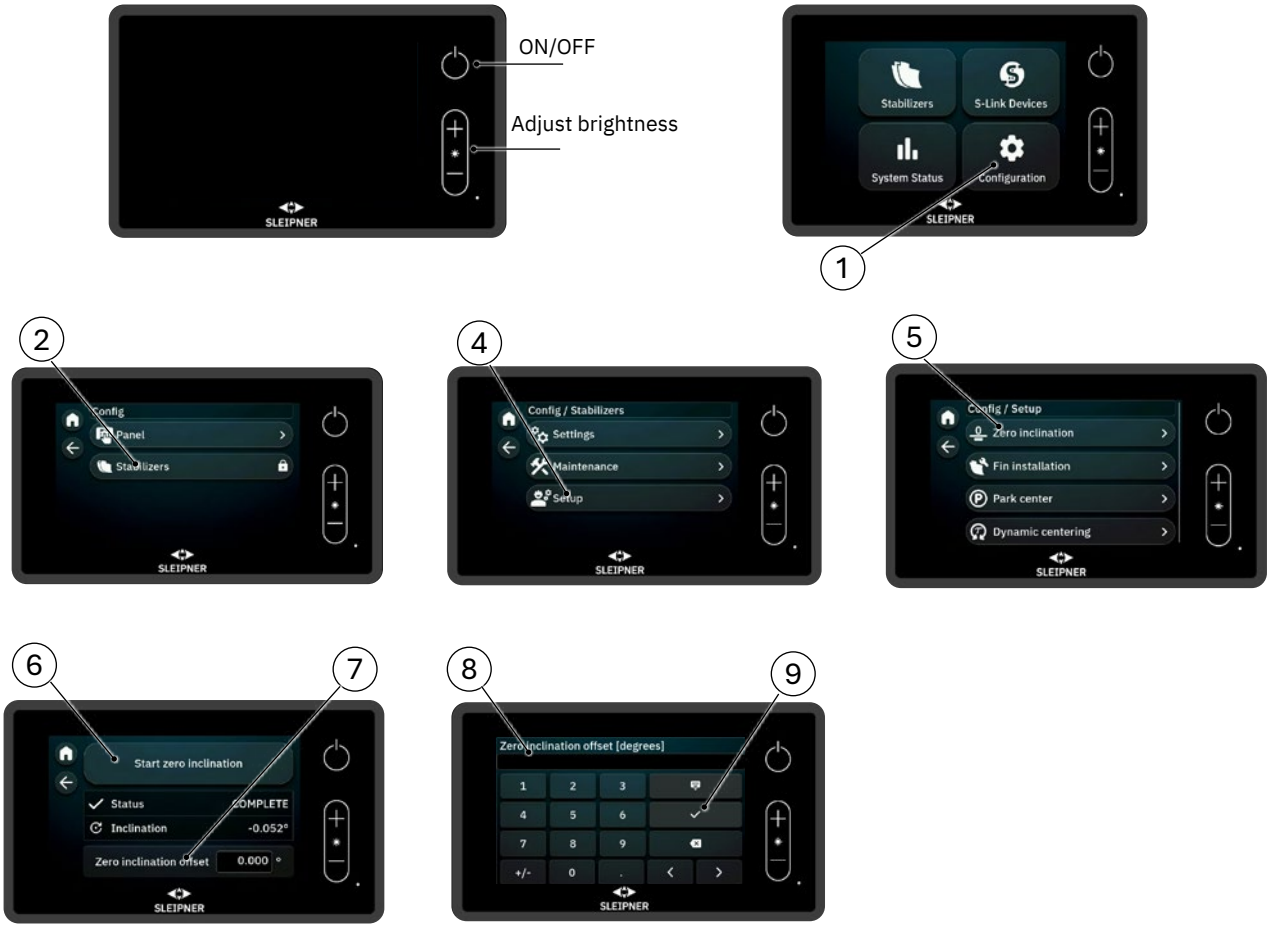

Purpose

Dynamic centers allowing the fins to operate at the ideal attack angle depending on the boat speed. By unlocking the fins and let them free float in five different speeds in the vessels speed range, the system will operate with the ideal angle of attack througout the vessels speed range
This will minimize the drag from the fins, and also reduce the fuel consumption. This is illustrated as an example in the figure below.
The fin position will be interpolated between the different speeds, so it is important to have speed both before and after the planing mode, as the water flow over the fins often changes during the transition to planing mode.

Run the vessel on flat water, or, if not possible, with the waves straigt against the bow to minimize roll. Keep a steady course during the setting process. It is not possible to get a good result in large wave conditions.
If the vessel has interceptors or trim flaps, these are to be used as normal during the setup procedure. MC_0906
Speeds must be increasing, ie. speed 1 is the lowest speed and speed 5 is the top speed.
Speed 1 is normally set close to parked position, to reduce the roll movement of the vessel when turning off the system, which will center the fins.

Procedure

1. From the main menu, select the “Configuration” menu.
2. Select the “Stabilizers” menu.
3. Enter the PIN code. (1234 is standard). Confirm with ✓.
4. Select Setup
5. Select Dynamic centering
6. Select “Float fins”.
7. Set vessel in idle speed forward. Scroll to highlight “1/5” in the Speeds vindow.
8. When the speed is constant, and fin positions are stable, press “Capture” to register the speed and corresponding fin position.

- Increase the vessel speed to 2/5 of max speed. Scroll to highlight 2/5 in the speeds window. When the speed is constant, and fin positions are stable, press “Capture” to register the speed and corresponding fin position.
- Continue the procedure for the remaining speed settings.
- Note that it also is possible to enter the speed and fin position manually.
- For each speed, while the stabilizer system is active, use the lift setting to optimize the boat speed.

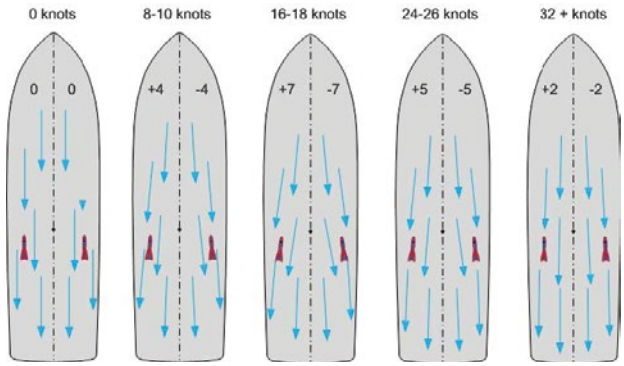

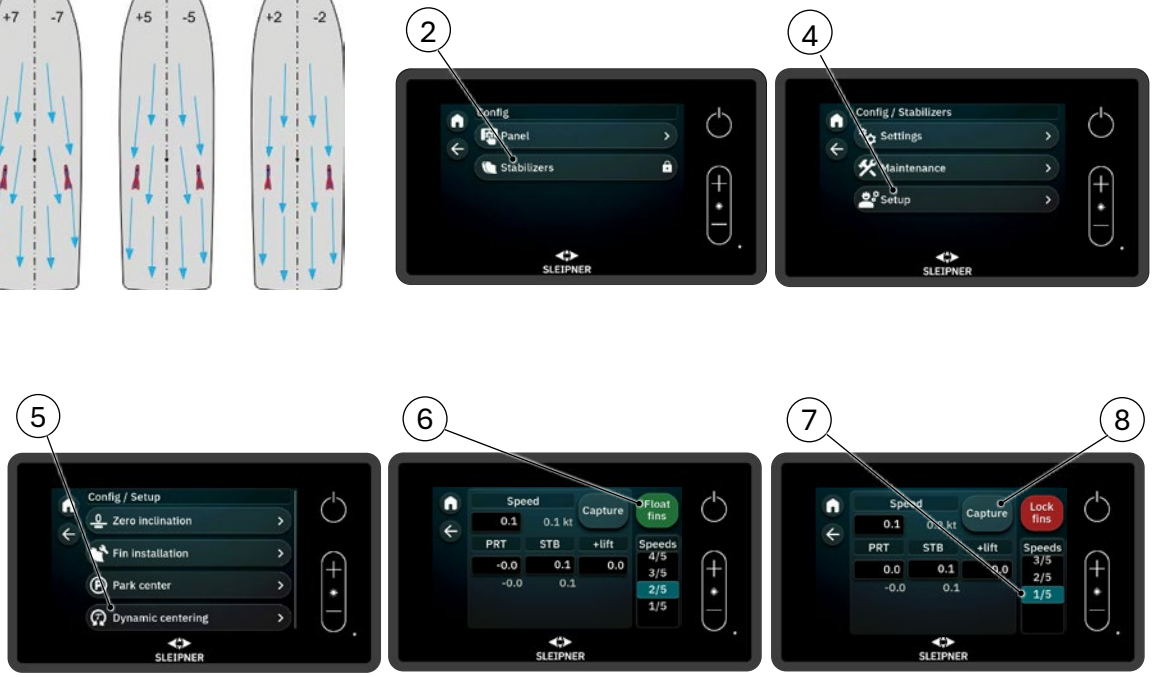

MC_0904

Stabilizer settings procedure

The setting parameters in the Stabilizing, Optimization and Fin/Actuator tabs in the settingsmenu will differ from vessel to vessel.
Generic parameters is set as standard values in the system. Sleipner can provide more specific parameters for certain hull / vessel types. Contact your dealer for more info.

Anyhow; the parameters in the Settings -> Handling tab must be set by the installer.

Handling tab settings

1. Select the “Config” menu.
2. Select the “Stabilizer” menu.
3. Select the “Settings” menu
4. Select the “Handling” menu.
5. Select Backing detection, and select the correct input from the dropdown menu.
6. Select SCU Mount direction and select the SCU installation direction from the dropdown menu.
   This refers to how the SCU is mounted, see installation manual for reference.

Stabilizing-, Optimization-, and Fin/Actuator tabs

The setting parameters will differ from vessel to vessel. In order to have a easy set up procedure, generic parameters is set as standard values in the system.
Sleipner will provide more specific parameters for certain hull / vessel types. Contact your dealer for more info.
The numbers shown in the illustrations below are just examples and not to be used.
The boat builder or advanced users are able to optimize and set new values for all the parameters for optimizing the system to the vessel.

When it is necessary to enter new values:
Select the value that need to be changed, a keyboard shows up in the display.
Enter the new value, and confirm.

The Stabilizing-, Optimization- and Fin/Actuator tabs are quite similar in sub menus and how to adjust the values. As an example, the Stabilizing tabs are shown in the illustrations below.
The menu tabs has sub menus; At anchor (**Reference 1**) and Cruising (**Reference 2**).
The parameter values are changed by selecting the numeric value connected to the actual parameter (**Reference 3**), and entering the new value in the numeric keyboard that shows up in the display. Confirm with enter on the keyboard.
Scroll the display to see all the parameter settings (**Reference 4)** in the menus.

After final installation of the fins place the Fin Location Labels to appropriately identify the location of the fins underwater.

Safety Labels
To ensure crane operators and swimmers are aware of the fin's location and operation area, please mount the safety labels on the hull

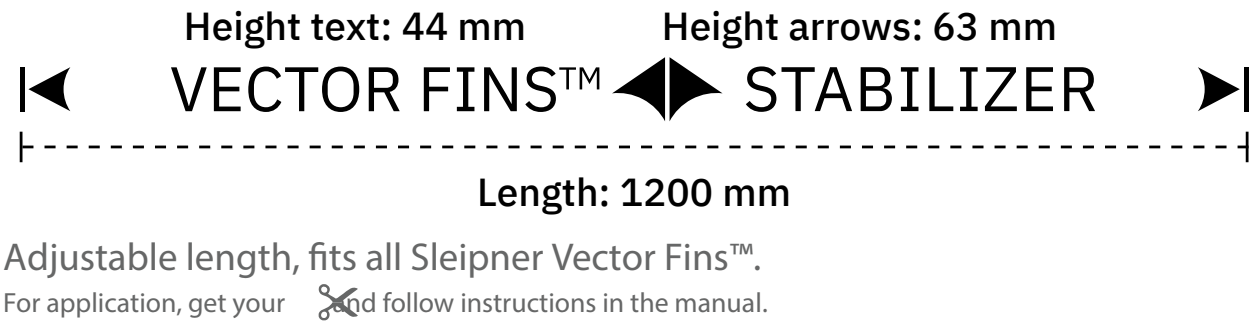

Use scissors to cut the end arrow symbols on the label.

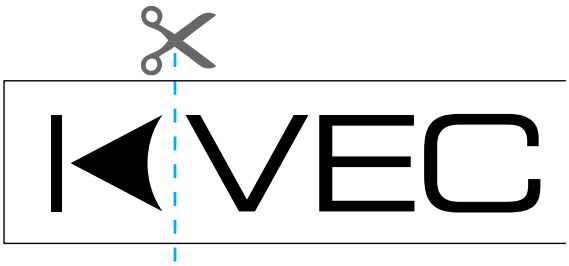

Place the label to the hull and place the end arrow labels to cover the length of the stabiliser fin.

Label designs

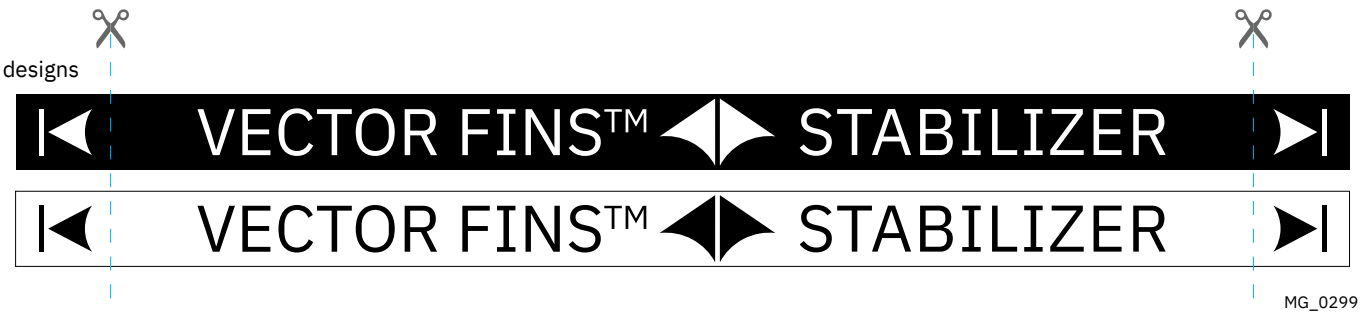

MG_0299

Introduction:

At Sleipner Group, we prioritize sustainability and encourage the repair and re-manufacturing of products to extend their life cycles. If disposal is necessary, please follow these guidelines to recycle and manage waste responsibly, ensuring our efforts align with environmental protection efforts.

Electric motors and electronics

- Disconnect from any power sources and dismantle them carefully.
- Recycle components through certified e-waste recycling centers that can adequately handle and recover electronic materials.
- Dispose of any non-recyclable electronic parts according to local environmental regulations.

Metals:

- Collect and sort metal parts for recycling as scrap metal.
- To increase recycling efficiency, ensure that metals are clean and free from non-metal attachments.

Plastics:

- Identify recyclable plastics based on local recycling guidelines.
- Remove any non-plastic components and clean them before recycling to improve the quality of the recycled material.

Hazardous materials:

- Correctly identify any hazardous substances within components, such as batteries or capacitors etc.
- Follow local regulations for the safe disposal of hazardous materials to prevent pollution and protect environmental health.

General disposal instructions:

- Consult local recycling programs to determine the acceptability of various materials.
- Use authorized disposal services to ensure compliance with environmental standards.

Safe disposal practices:

- Adhere to local laws and regulations for waste management to minimize environmental impact and ensure community safety.

This guide is designed to help reduce our products' environmental footprint through responsible end-of-life management. Please contact your local waste management supplier or our support team for more specific disposal information or further assistance.

MC_0848

Service and support

Find your local certified dealer through our global network to receive expert service and support.
Visit our website for more information: *www.sleipnergroup.com/support*

Product spare parts and additional resources

For additional supporting documentation, visit our website at *www.sleipnergroup.com* and locate your specific Sleipner product.

Patents

At Sleipner we continually reinvest to develop and offer the latest technology in marine advancements.
To see the many unique designs we have patented, visit our website: *www.sleipnergroup.com/patents*

MC_0024

1. Sleipner Motor AS (The “Warrantor”) warrants that the equipment (parts, materials, and embedded software of products) manufactured by the Warrantor is free from defects in workmanship and materials for purpose for which the equipment is intended and under normal use and maintenance service (the “Warranty”).
2. This Warranty is in effect for two years (Leisure Use) or one year (Commercial and other Non-leisure Use) from the date of delivery/purchase by the end user, with the following exceptions;
   (a) For demonstration vessels, or vessels kept on the water, the dealer is considered as the end user from 6 months after their launch of the vessel;
   (b) The warranty period starts no later than 18 months after the first launch of the vessel.
   Please note that the boat manufacturer and dealer must pay particular attention to correct maintenance and service both by the products manuals as well as general good practice for the location the boat is kept in the period the boat is in their care. In cases where the 6 and 18 months grace periods for boat builders and dealers are passed, it is possible to obtain a full warranty upon inspection and approval of the warrantor or such representative.
3. Certain parts, classified as wearable or service parts, are not covered by the warranty. A failure to follow the required maintenance and service work as described in the product manual render all warranty on parts or components directly or indirectly affected by this void. Please also note that for some parts, time is also a factor separately from actual operational hours.
4. This Warranty is transferable and covers the equipment for the specified warranty period.
5. The warranty does not apply to defects or damages caused by faulty installation or hook-up, abuse or misuse of the equipment including exposure to excessive heat, salt or fresh water spray, or water immersion except for equipment specifically designed as waterproof.
6. In case the equipment seems to be defective, the warranty holder (the “Claimant”) must do the following to make a claim:
   (a) Contact the dealer or service centre where the equipment was purchased and make the claim. Alternatively, the Claimant can make the claim to a dealer or service centre found at www.sleipnergroup.com. The Claimant must present a detailed written statement of the nature and circumstances of the defect, to the best of the Claimant’s knowledge, including product identification and serial nbr., the date and place of purchase and the name and address of the installer. Proof of purchase date should be included with the claim, to verify that the warranty period has not expired;
   (b) Make the equipment available for troubleshooting and repair, with direct and workable access, including dismantling of furnishings or similar, if any, either at the premises of the Warrantor or an authorised service representative approved by the Warrantor. Equipment can only be returned to the Warrantor or an authorised service representative for repair following a pre-approval by the Warrantor’s Help Desk and if so, with the Return Authorisation Number visible postage/shipping prepaid and at the expense of the Claimant.
7. Examination and handling of the warranty claim:
   (a) If upon the Warrantor’s or authorised service Representative’s examination, the defect is determined to result from defective material or workmanship in the warranty period, the equipment will be repaired or replaced at the Warrantor’s option without charge, and returned to the Purchaser at the Warrantor’s expense. If, on the other hand, the claim is determined to result from circumstances such as described in section 4 above or a result of wear and tear exceeding that for which the equipment is intended (e.g. commercial use of equipment intended for leisure use), the costs for the troubleshooting and repair shall be borne by the Claimant;
   (b) No refund of the purchase price will be granted to the Claimant, unless the Warrantor is unable to remedy the defect after having a reasonable number of opportunities to do so. In the event that attempts to remedy the defect have failed, the Claimant may claim a refund of the purchase price, provided that the Claimant submits a statement in writing from a professional boating equipment supplier that the installation instructions of the Installation and Operation Manual have been complied with and that the defect remains.
8. Warranty service shall be performed only by the Warrantor, or an authorised service representative, and any attempt to remedy the defect by anyone else shall render this warranty void.
9. No other warranty is given beyond those described above, implied or otherwise, including any implied warranty of merchantability, fitness for a particular purpose other than the purpose for which the equipment is intended, and any other obligations on the part of the Warrantor or its employees and representatives.
10. There shall be no responsibility or liability whatsoever on the part of the Warrantor or its employees and representatives based on this Warranty for injury to any person or persons, or damage to property, loss of income or profit, or any other incidental, consequential or resulting damage or cost claimed to have been incurred through the use or sale of the equipment, including any possible failure or malfunction of the equipment or damages arising from collision with other vessels or objects.
11. This warranty gives you specific legal rights, and you may also have other rights which vary from country to country.

MC_1161

Pre-power up checklist

Date	Performed by	Inspection point		
		Check that the encoder and power cables from each of the eFDs are correctly connected to the corresponding actuator.	Port:	Starboard:
		Verify that the eFD S2 switches are correctly configured.	Port:	Starboard:
		Ground wire from bonding system connected to actuator base and housing	Port:	Starboard:
		Check that the cable dimension and fuse rating of the power supply cables to the eFD are correct	Port:	Starboard:
		SCU correctly installed on a non-vibrating surface, facing bow or stern, and close to boat roll center.	Bow:	Stern:
		Reverse detection wiring correct	NMEA:	Rev loop:
		Check that the SCU cables are correct, connector X5 to starboard actuator, X6 to port actuator	Port:	Starboard:
		S-Link system is correctly wired, end terminators in place, S-Link power on same fuse as the rest of the system		
		Write down the actuator and fin model names as they are required in the setup steps: Actuator model:_____ Fin model:_____		
Proceed to power up the system to continue the required start-up tasks before the vessel can be launched.				

Pre-launch checklist

Date	Performed by	Inspection point
		Make sure to upgrade the stabilizer panel TP-43A and SCU (and all other S-Link devices) to latest FW version available on first power-up, before starting the setup tasks.
		Actuators MUST be aligned to keel and keel center set. This is the reference point for the control system and must be performed before the launch. A special tool is used to align the actuators to the keel.
		Power must be available, 24V for control system, 230V/400V for eFD depending on variant
		Reverse detection system is functioning correctly

After launch checklist

Date	Performed by	Inspection point
		Set standard parameters for the boat model, either using the stabilizer control panel menus or parameter file upload from S-Link Programmer
		Set zero inclination
		Verify that the SCU installation direction config is correct
		Check that GPS signal is available

SLEIPNER

Ocean born. Tech bred.

SLEIPNER MOTOR AS

P.O. Box 519

N-1612 Fredrikstad

Norway

www.sleipnergroup.com

Made in Norway

© Sleipner Motor AS. All rights reserved.
The information in this document was correct at the time of publication. However, Sleipner Motor AS accepts no liability for any inaccuracies or omissions it may contain. Continuous product improvement may result in changes to product specifications without prior notice. Consequently, Sleipner Motor AS accepts no liability for any differences between the product and this document. This document may contain content prepared with the assistance of artificial intelligence (AI). AI-assisted content has been reviewed and approved by Sleipner employees prior to publication.